Verification Examples

AXISVM

2023

Linear static

Software Release Number: X7r1a
Date: 06. 02. 2023.
Tested by: InterCAD
File name: beam1.axs

Thema	Supported bar with concentrated loads.
Analysis Type	Linear analysis.
Geometry	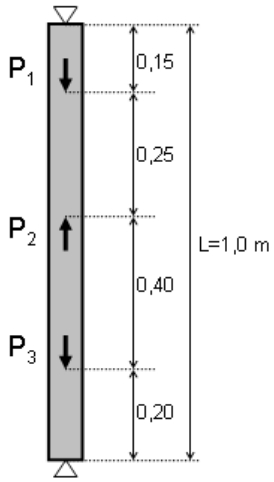 Side view Section Area = 100,0 cm² (10×10)
Loads	Axial direction forces P_1 = -200 kN, P_2 = 100 kN, P_3 = -40 kN
Boundary Conditions	Fix ends, at R_1 and R_5.
Material Properties	E = 20000 kN / cm² ν = 0,3
Element types	Beam element
Mesh	
Target	R_1 , R_5 support forces
Results	

	Theory	AxisVM	%
R_1 [kN]	-22,00	-22,00	0,00
R_5 [kN]	118,00	118,00	0,00

Software Release Number: X7r1a
Date: 06. 02. 2023.
Tested by: InterCAD
File name: beam2.axs

Thema	Thermally loaded bar structure.
Analysis Type	Linear analysis.
Geometry	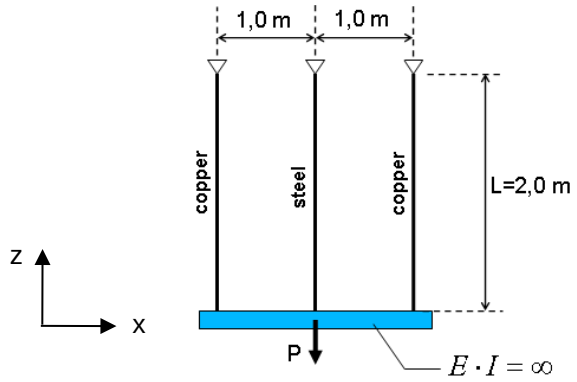 Side view Sections: Steel: $A_S = \pi \times 10^{-4}$ m^2 (D=2cm) Copper: $A_C = \pi \times 10^{-4}$ m^2 (D=2cm)
Loads	P = -12 kN (Point load) Temperature rise of 10 °C in the structure after assembly.
Boundary Conditions	The upper end of bars are fixed. Nodal DOF: Frame X-Z plane
Material Properties	Steel: E_S = 20700 kN / cm^2 , ν = 0,3 , $\alpha_S = 1{,}2 \times 10^{-5}$ °C^{-1} Copper: E_C = 11040 kN / cm^2 , ν = 0,3 , $\alpha_C = 1{,}7 \times 10^{-5}$ °C^{-1}
Element types	Beam element
Target	S_{max} in the three bars.
Results	

	Theory	AxisVM	%
Steel S_{max} [MPa]	23,824	23,848	0,10
Cooper S_{max} [MPa]	7,185	7,199	0,19

Software Release Number: X7r1a
Date: 06. 02. 2023.
Tested by: InterCAD
File name: beam3.axs

Thema	Continously supported beam with point loads.
Analysis Type	Linear analysis.
Geometry	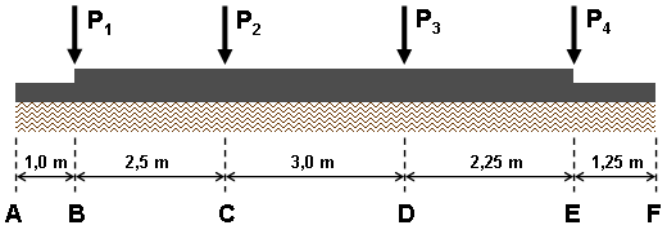 Side view (Section width = 1,00 m, height$_1$ = 0,30 m, height$_2$ = 0,60 m)
Loads	P_1= -300 kN, P_2= -1250 kN, P_3= -800 kN, P_4= -450 kN
Boundary Conditions	Elastic supported. From A to D is K_z = 25000 kN/m/m. From D to F is K_z = 15000 kN/m/m. Nodal DOF: Frame X-Z plane
Material Properties	E = 3000 kN/cm^2 ν = 0,3
Element types	Rib element: Three node beam element. Shear deformation is taken into account.
Target	e_z, M_y, V_z, R_z
Results	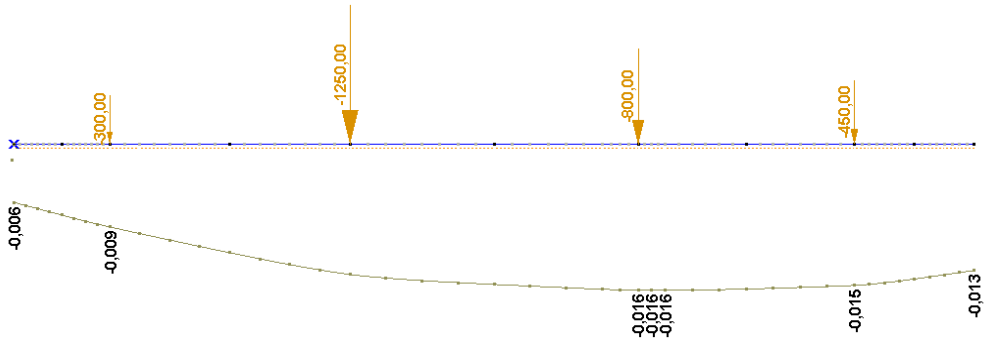 Diagram e_z 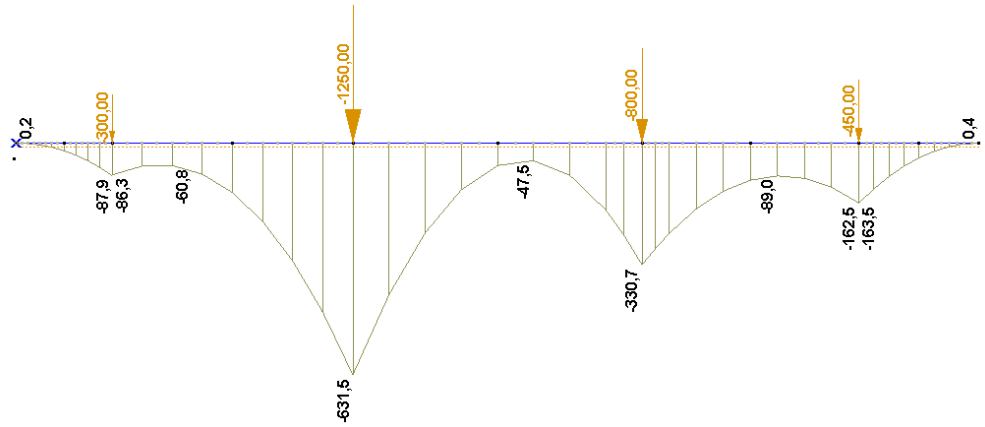 Diagram M_y
Results	

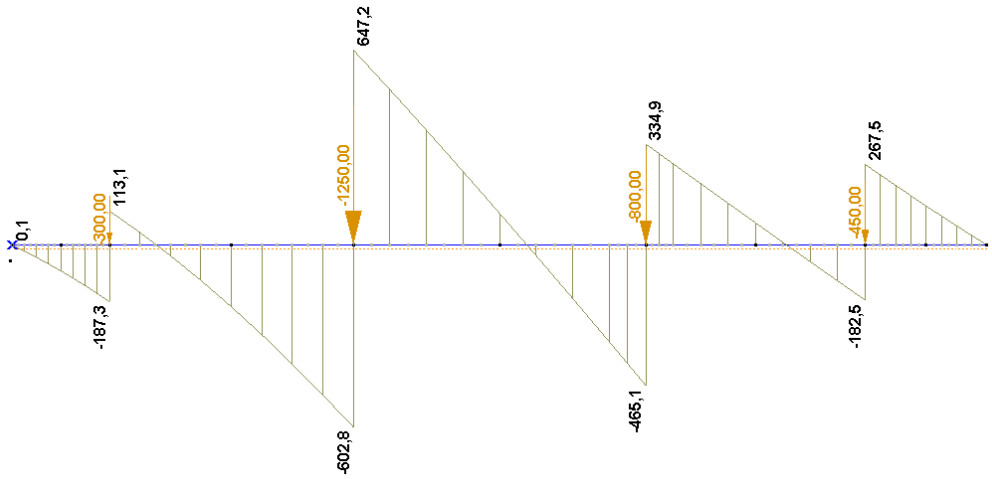

Diagram V_z

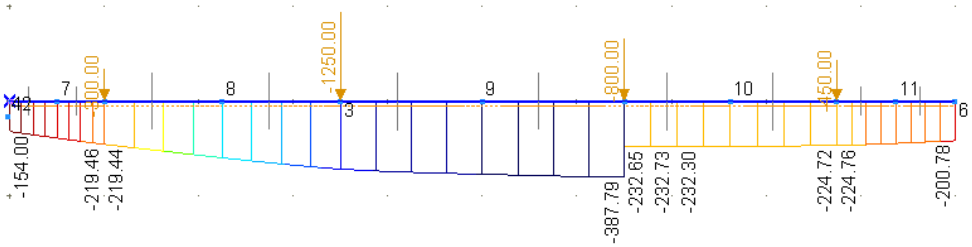

Diagram R_z

	Reference	AxisVM	e [%]
e_A [m]	0,0060	0,0062	3,33
e_B [m]	0,0090	0,0088	-2,22
e_C [m]	0,0140	0,0138	-1,43
e_D [m]	0,0150	0,0155	3,33
e_E [m]	0,0150	0,0150	0,00
e_F [m]	0,0130	0,0134	3,08

	Reference	AxisVM	e [%]
M_A [KNm]	0.0	0.2	0.00
M_B [KNm]	88.5	87.9	-0.68
M_C [KNm]	636.2	631.5	-0.74
M_D [KNm]	332.8	330.3	-0.75
M_E [KNm]	164.2	163.5	-0.43
M_F [KNm]	0.0	0.4	0.00

Results

	Reference	AxisVM	e [%]
V_A [KN]	0.00	0.09	0.00
V_B [KN]	112.10	113.09	0.88
V_C [KN]	646.80	647.15	0.05
V_D [KN]	335.00	334.86	-0.04
V_E [KN]	267.80	267.48	-0.12
V_F [KN]	0.00	-0.05	0.00

	Reference	AxisVM	e [%]
R_A [KN/m^2]	145.7	154.0	5.70
R_B [KN/m^2]	219.5	219.5	0.00
R_C [KN/m^2]	343.8	346.0	0.64
R_D [KN/m^2]	386.9	387.8	0.23
R_E [KN/m^2]	224.5	224.7	0.09
R_F [KN/m^2]	201.2	200.8	-0.20

Software Release Number: X7r1a
Date: 06. 02. 2023.
Tested by: InterCAD
File name: beam4.axs

Thema	External prestressed beam.
Analysis Type	Linear analysis.
Geometry	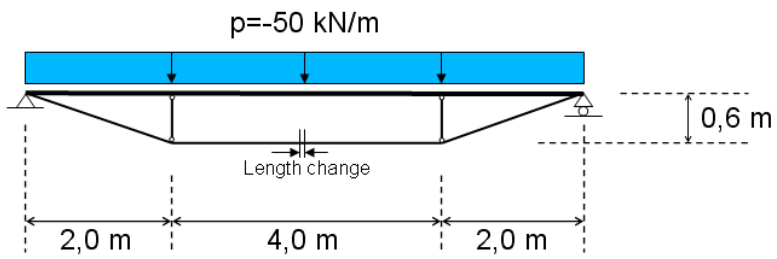 Side view
Loads	p = -50 kN /m distributed load Length change = -6,52E-3 at beam 5-6
Boundary Conditions	eY = eZ = = 0 at node 1 eX = eY = eZ = 0 at node 4
Material Properties	E = 2,1E11 N / m^2 Beam 1-5, 5-6, 6-4 A = 4,5E-3 m^2 I_z= 0,2E-5 m^4 Truss 2-5, 3-6 A = 3,48E-3 m^2 I_z= 0,2E-5 m^4 Beam 1-4 A = 1,516E-2 m^2 I_z= 2,174E-4 m^4
Mesh	Beam 1-4: division into N segment: N = 12 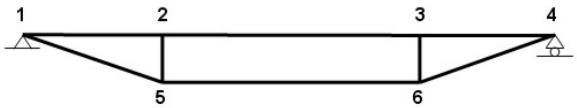
Element types	Rib element: Three node beam element, 1-5, 5-6, 6-4, 1-4 (shear deformation is taken into account) Truss element 2-5, 3-6
Target	N_X at beam 1-4 $M_{y,max}$ at beam 2-3 e_z at node 2

Results

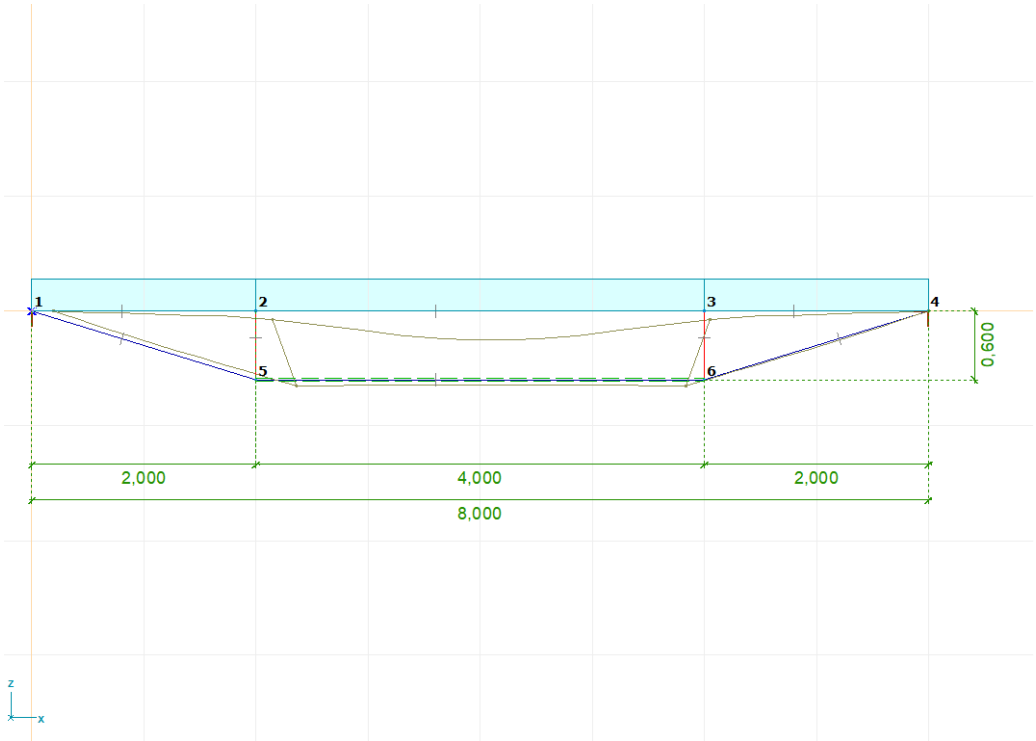

Diagram e_z

	ROBOT V6®	AxisVM	%
N_x [kN]	584.56	584.81	0.04
M_y [kNm]	49.26	49.82	1.10
e_z [mm]	-0.5421	-0.5469	0.89

Software Release Number: X7r1a
Date: 06. 02. 2023.
Tested by: InterCAD
File name: plane1.axs

Thema	Periodically supported infinite membrane wall with constant distributed load.
Analysis Type	Linear analysis.
Geometry	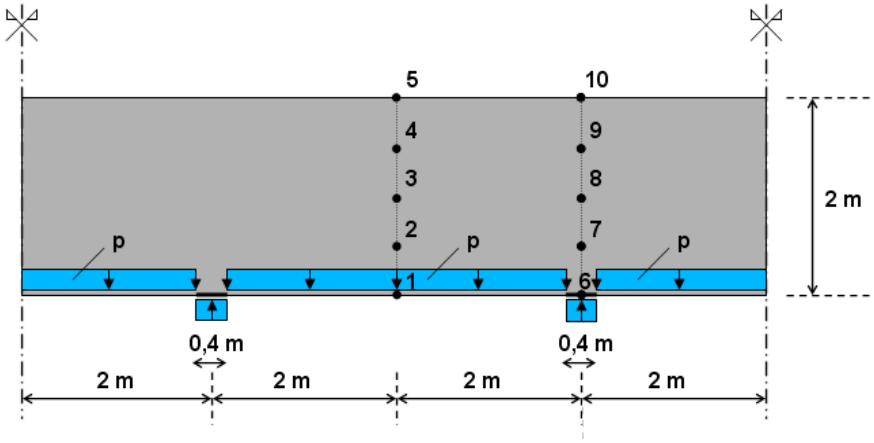 Side view (thickness = 20,0 cm)
Loads	p = 200 kN / m
Boundary Conditions	vertical support at every 4,0 m support length is 0,4 m (Rz = 1E+3) Symmetry edges – Nodal DOF: (C C f C C C)
Material Properties	E = 880 kN / cm^2 ν = 0,16
Element types	Parabolic quadrilateral membrane (plane stress)
Mesh	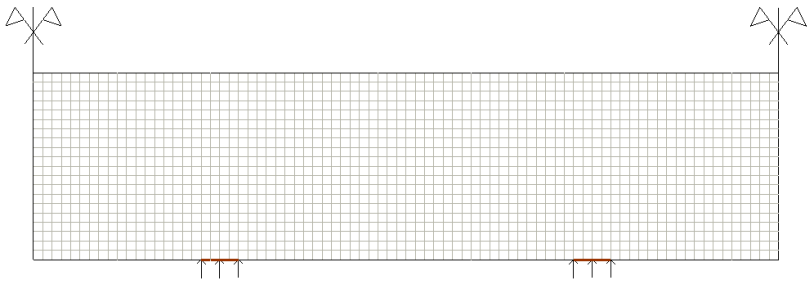
Target	S_{xx} at 1-10 nodes (1-5 at middle, 6-10 at support)

Results

Node	Analytical [kN/cm^2]	AxisVM [kN/cm^2]	%
1	0,1313	0,1310	-0,23
2	0,0399	0,0395	-1,00
3	-0,0093	-0,0095	2,15
4	-0,0412	-0,0413	0,24
5	-0,1073	-0,1070	-0,28
6	-0,9317	-0,9166	-1,62
7	0,0401	0,0426	6,23
8	0,0465	0,0469	0,86
9	0,0538	0,0537	-0,19
10	0,1249	0,1245	-0,32

Reference:

Dr. Bölcskey Elemér – Dr. Orosz Árpád:
Vasbeton szerkezetek Faltartók, Lemezek, Tárolók

Software Release Number: X7r1a
Date: 06. 02. 2023.
Tested by: InterCAD
File name: plane2.axs

Thema	Clamped beam examination with plane stress elements.
Analysis Type	Linear analysis.
Geometry	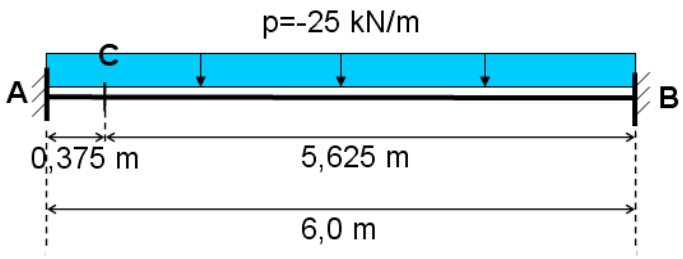 Side view
Loads	p = -25 kN/m
Boundary Conditions	Both ends built-in. Line support component stiffness: 1E+10. Symmetry edge – Nodal DOF: (C C f C C C)
Material Properties	E = 880 kN / cm^2 ν = 0
Element types	Parabolic quadrilateral membrane (plane stress)
Mesh	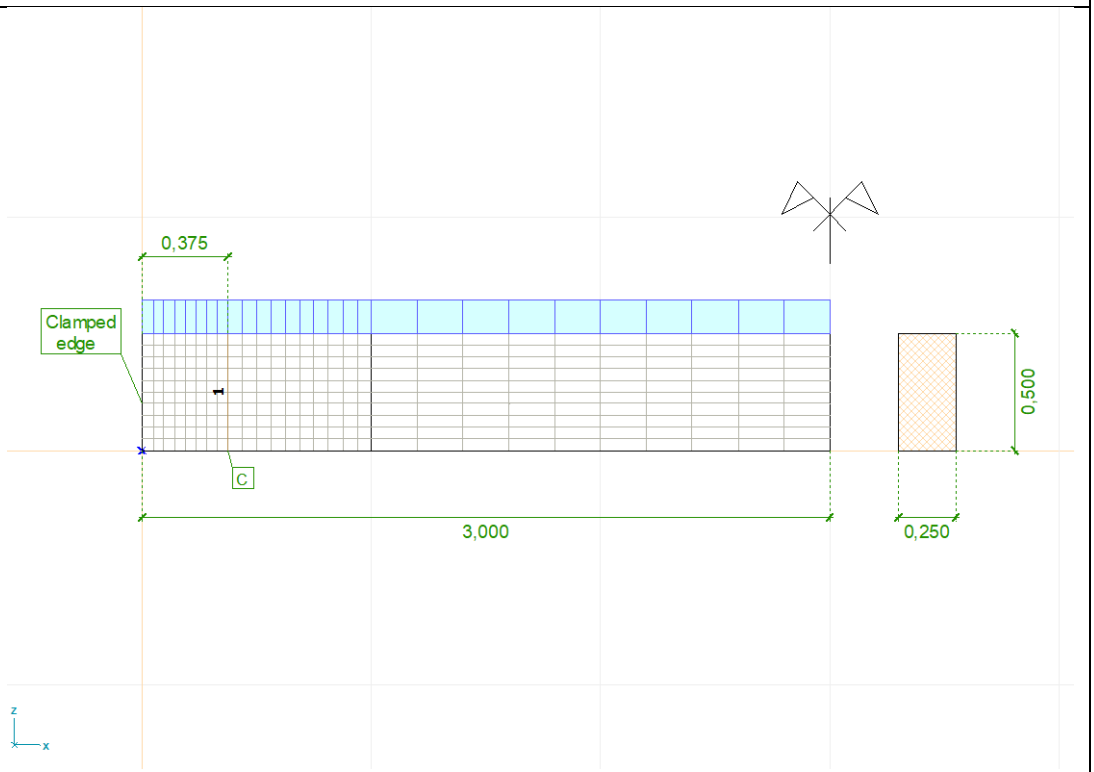 Side view

Target	$\tau_{xy,\ max}$ at section C
Results	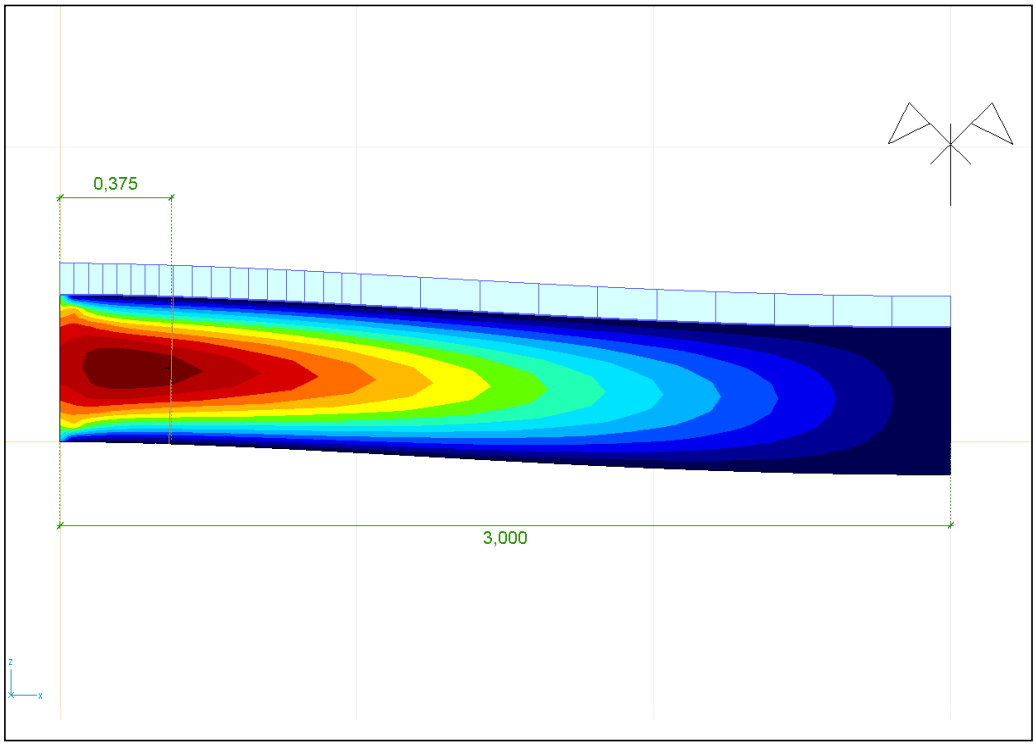 Diagram τ_{xy} 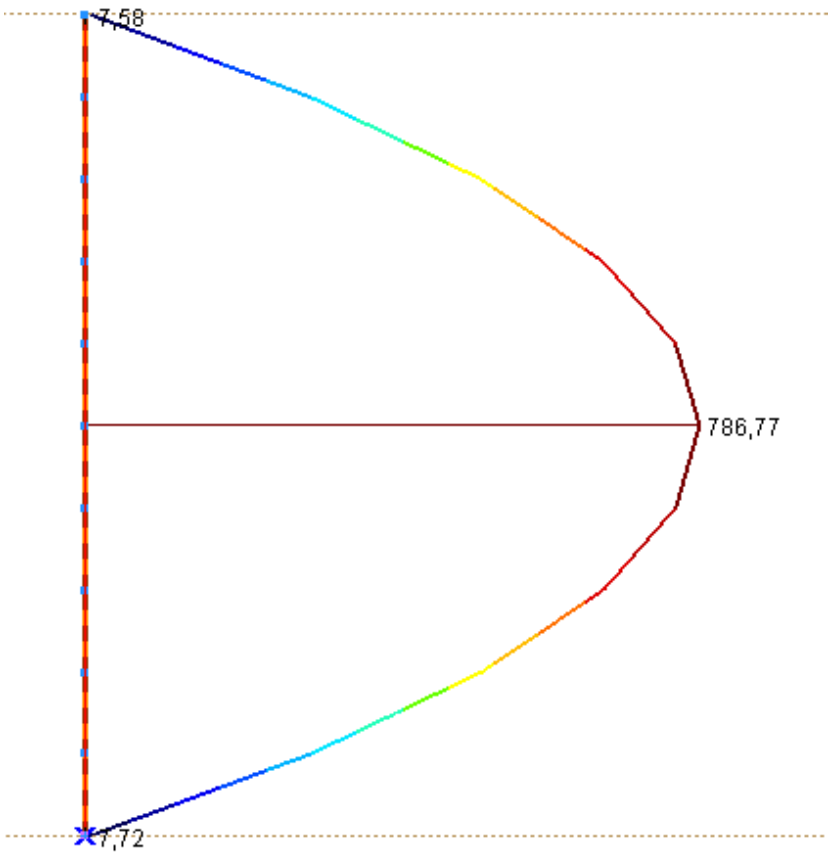 Diagram τ_{xy} at section C

	$V = 65{,}625 \quad kN \quad (from \quad beam \quad theory)$ $S_y^{'} = 0{,}0078125 \quad m^3$ $b = 0{,}25 \quad m$ $I_y = 0{,}00260416 \quad m^4$ $\tau_{xy} = \frac{V \cdot S_y^{'}}{b \cdot I_y} = \frac{65{,}625 \cdot 0{,}0078125}{0{,}25 \cdot 0{,}00260416} = 787{,}5 \quad kN/m^2$ AxisVM result τ_{xy} = 786,77 kN / m² Difference = -0,10 % AxisVM result $V = \sum n_{xy} = 65{,}63 \quad kN$ Difference = 0,008 %

Software Release Number: X7r1a
Date: 06. 02. 2023.
Tested by: InterCAD
File name: basaglia.axs

Thema	Spatial frame structure from Basaglia et al.(7 DOF frame)
Analysis Type	Linear analysis.
Geometry	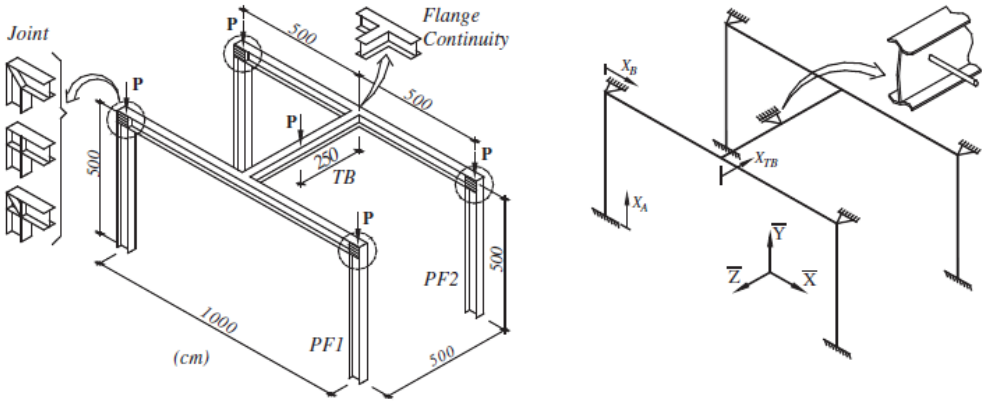 Spatial frame loading and support conditions (Basaglia et al. 2012)
Loads	P = 1 kN
Boundary Conditions	Column bases are fixed (i), the column-to-beam joints cannot move along X and Z (ii), and the displacement along X of the transverse beam midspan cross-section is also prevented (iii). Three types of warping continuity are analyzed at the joints, like: box-stiffened, diagonal-stiffened, diagonal/box-stiffened.
Material Properties	E = 21000 kN / cm^2 ν = 0
Element types	14 DOF warping beam element.
Target	Bimoments at joints.
Results	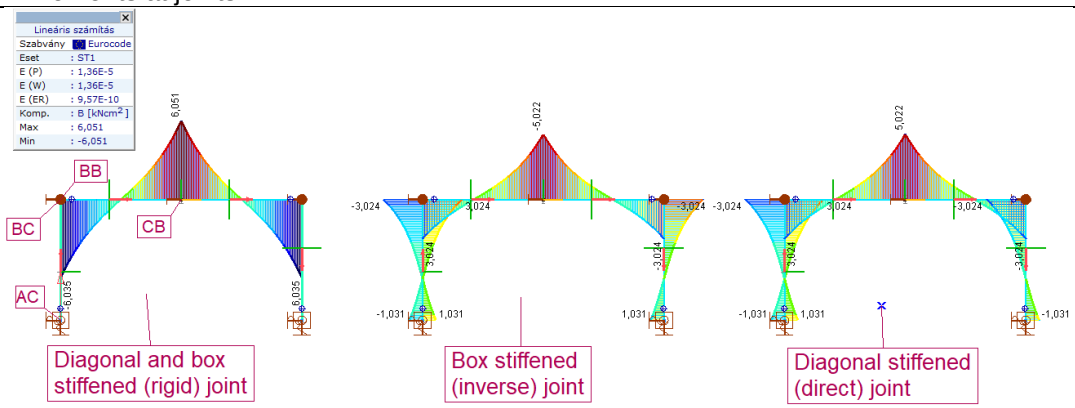 AxisVM bimoment diagrams [kNcm^2] 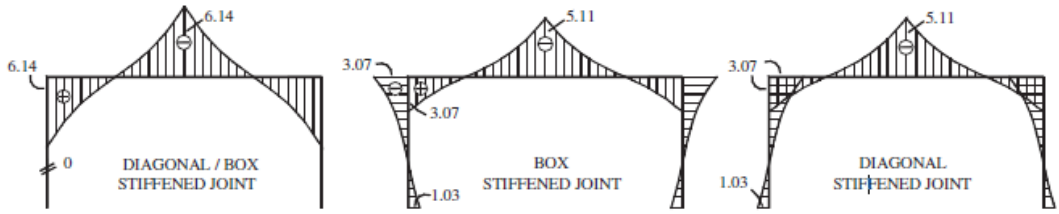 Basaglia et al. bimoment diagrams [kNcm^2]

Cross section	Basaglia et al. [kNcm^2]			AxisVM [kNcm^2]			Δ [%]		
	Rigid	Inverse	Direct	Rigid	Inverse	Direct	Rigid	Inverse	Direct
AC	0	1.03	-1.03	0	1.03	-1.03	0	0	0
BC	0	-3.07	3.07	0	-3.02	3.02	0	1.6	1.6
BB	6.14	3.07	3.07	6.05	3.02	3.02	1.5	1.6	1.6
CB	-6.14	-5.11	-5.11	-6.05	-5.02	-5.02	1.6	1.8	1.8

Software Release Number: X7r1a
Date: 06. 02. 2023.
Tested by: InterCAD
File name: plate1.axs

Thema	Clamped thin square plate.
Analysis Type	Linear analysis.
Geometry	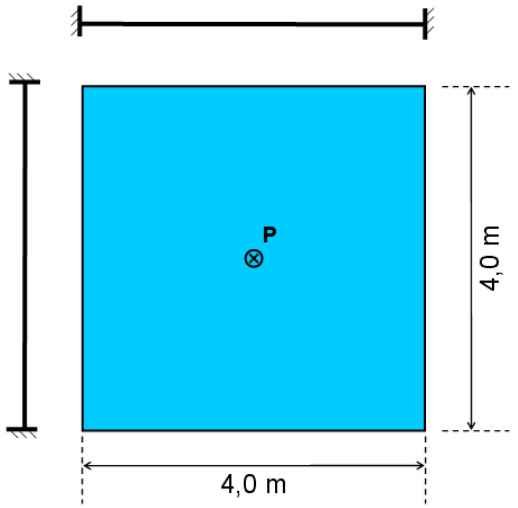 Top view (thickness = 5,0 cm)
Loads	P = -10 kN (at the middle of the plate)
Boundary Conditions	eX = eY = eZ = fiX = fiY = fiZ = 0 along all edges Nodal DOF: Plate in X-Y plane
Material Properties	E = 20000 kN / cm^2 ν = 0,3
Element types	Plate element (Parabolic quadrilateral, heterosis type)
Mesh	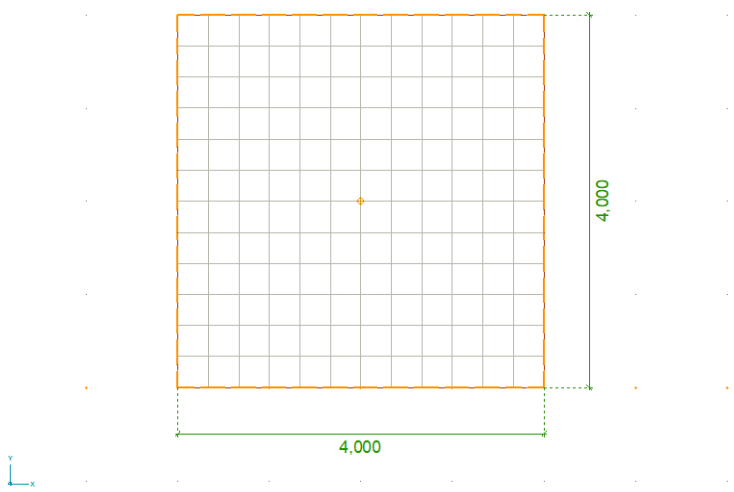
Target	Displacement of middle of the plate

Results

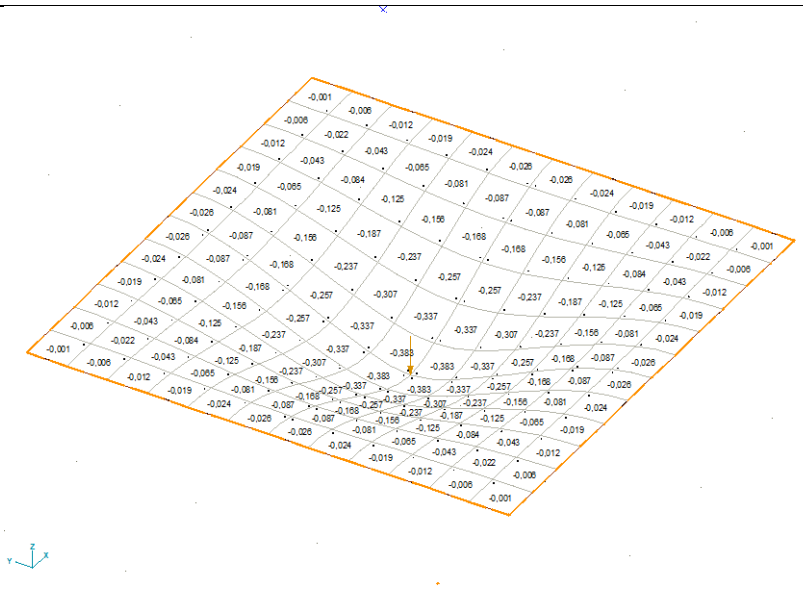

Displacements

Mode	Mesh	Book[1]	Timoshenko[2]	AxisVM	Diff[1] [%]	Diff[2] [%]
1	2x2	0,402	0,38	0,420	4,48	10,53
2	4x4	0,416		0,369	-11,30	-2,89
3	8x8	0,394		0,381	-3,30	0,26
4	12x12	0,387		0,383	-1,03	0,79
5	16x16	0,385		0,383	-0,52	0,79

References:

1.) The Finite Element Method (Fourth Edition) Volume 2.
/O.C. Zienkiewicz and R.L. Taylor/ McGraw-Hill Book Company 1991 London
2.) Result of analytical solution of Timoshenko

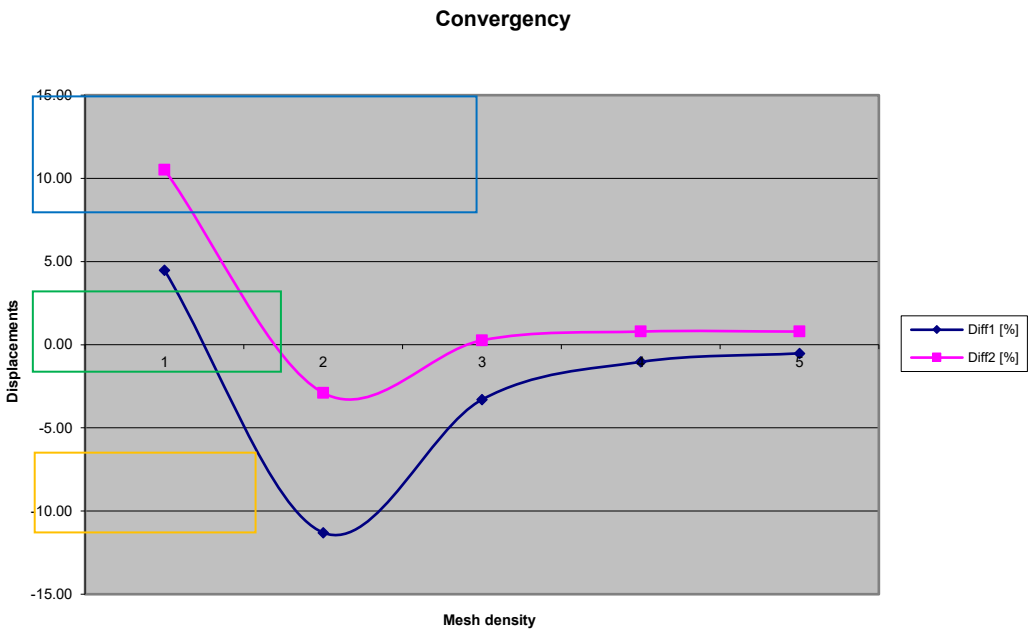

Software Release Number: X7r1a
Date: 06. 02. 2023.
Tested by: InterCAD
File name: plate2.axs

Thema	Plate with fixed support and constant distributed load.
Analysis Type	Linear analysis.
Geometry	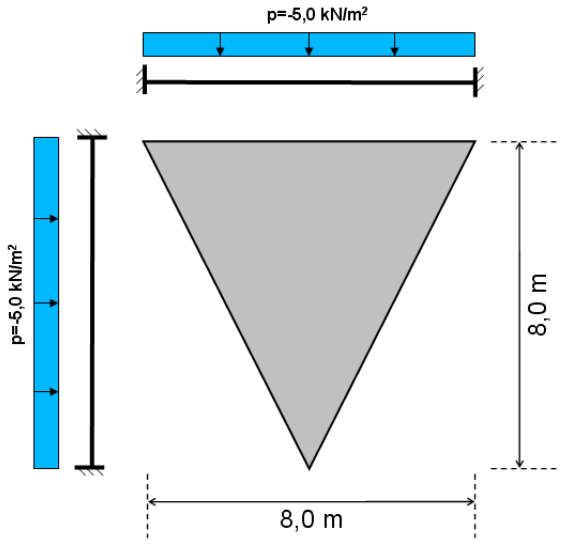 Top view (thickness = 15,0 cm)
Loads	P = -5 kN / m²
Boundary Conditions	eX = eY = eZ = fiX = fiY = fiZ = 0 along all edges Nodal DOF: Plate in X-Y plane
Material Properties	E = 990 kN/cm² ν = 0,16
Element types	Parabolic triangle plate element
Mesh	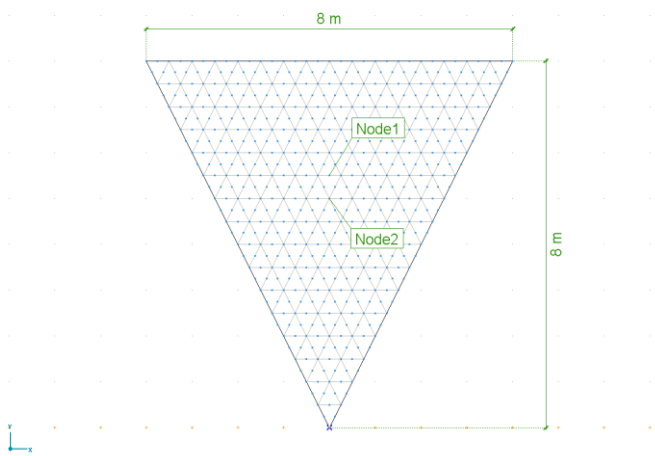
Target	Maximal eZ (found at Node1) and maximal m_x (found at Node2)
Results	

Component	Nastran®	AxisVM	%
eZ,max [mm]	-1,613	-1,595	-1,12
mx,max [kNm/m]	3,060	3,060	0,00

Software Release Number: X7r1a
Date: 06. 02. 2023.
Tested by: InterCAD
File name: plate3.axs

Thema	Annular plate.
Analysis Type	Linear analysis.
Geometry	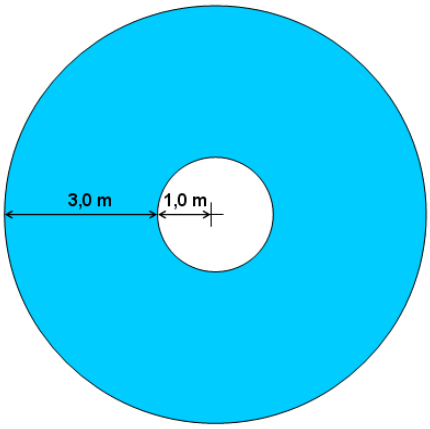 Top view (thickness = 22,0 cm)
Loads	Edge load: Q = 100 kN / m Distributed load: q = 100 kN / m^2
Boundary Conditions	Nodal DOF: Plate in X-Y plane 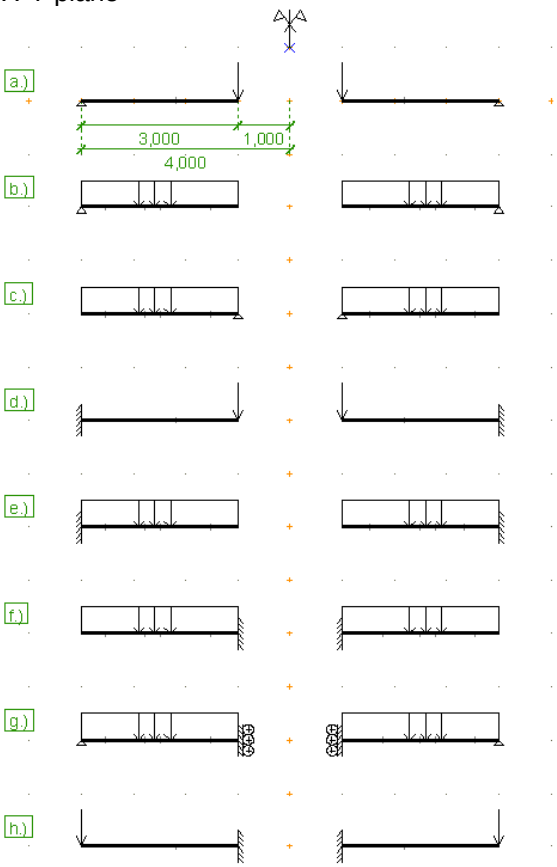
Material Properties	E = 880 kN / cm^2 ν = 0,3
Element types	Plate element (parabolic quadrilateral, heterosis type)

Mesh

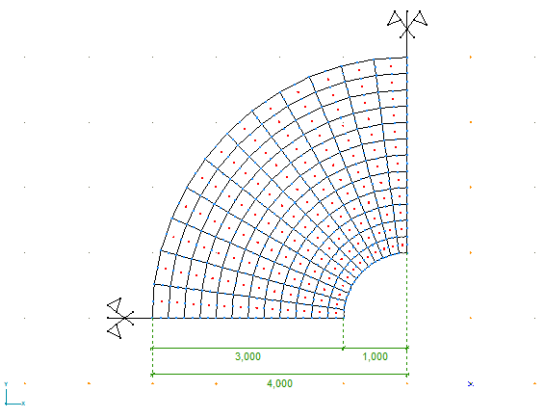

Target

S_{max}, e_{max}

Results

Model	Theory S_{max} [kN/cm²]	AxisVM S_{max} [kN/cm²]	%
a.)	2,82	2,82	0,00
b.)	6,88	6,85	-0,44
c.)	14,22	14,29	0,49
d.)	1,33	1,33	0,00
e.)	2,35	2,25	-4,26
f.)	9,88	9,87	-0,10
g.)	4,79	4,78	-0,21
h.)	7,86	7,85	-0,13

Model	Theory e_{max} [mm]	AxisVM e_{max} [mm]	%
a.)	77,68	76,82	-1,11
b.)	226,76	223,27	-1,54
c.)	355,17	355,37	0,06
d.)	23,28	23,36	0,34
e.)	44,26	44,56	0,68
f.)	123,19	123,38	0,15
g.)	112,14	112,93	0,70
h.)	126,83	126,95	0,09

Reference:

S. Timoshenko and S. Woinowsky-Krieger: Theory of Plates And Shells

Software Release Number: X7r1a
Date: 06. 02. 2023.
Tested by: InterCAD
File name: plate4.axs

Thema	All edges simply supported plate with partial distributed load.
Analysis Type	Linear analysis.
Geometry	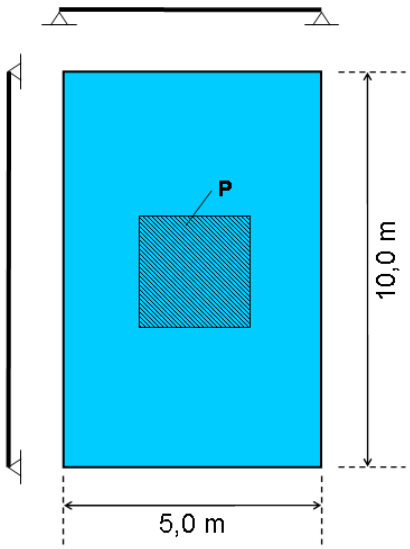 Top view (thickness = 22,0 cm)
Loads	Distributed load: q = -10 kN / m^2 (middle of the plate at 2,0 x 2,0 m area)
Boundary Conditions	a.) eX = eY = eZ = 0 along all edges (soft support) b.) eX = eY = eZ = 0 along all edges φ = 0 perpendicular the edges (hard support) Nodal DOF: Plate in X-Y plane
Material Properties	E = 880 kN / cm^2 ν = 0,3
Element types	Plate element (Heterosis type)
Mesh	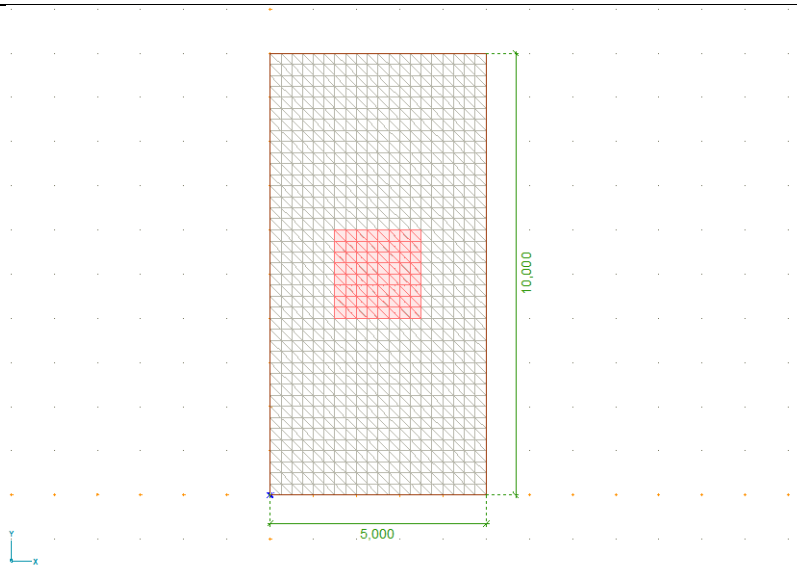

Target	$m_{x,\,max}$, $m_{y,\,max}$
Results	**a.)**

Moment	Theory	AxisVM	%
$m_{x,\,max}$ [kNm/m]	7,24	7,34	1,38
$m_{y,\,max}$ [kNm/m]	5,32	5,39	1,32

b.)

Moment	Theory	AxisVM	%
$m_{x,\,max}$ [kNm/m]	7,24	7,28	0,55
$m_{y,\,max}$ [kNm/m]	5,32	5,35	0,56

Reference:

S. Timoshenko and S. Woinowsky-Krieger: Theory of Plates And Shells

Software Release Number: X7r1a
Date: 06. 02. 2023.
Tested by: InterCAD
File name: plate5.axs

Thema	Clamped plate with linear distributed load.
Analysis Type	Linear analysis.
Geometry	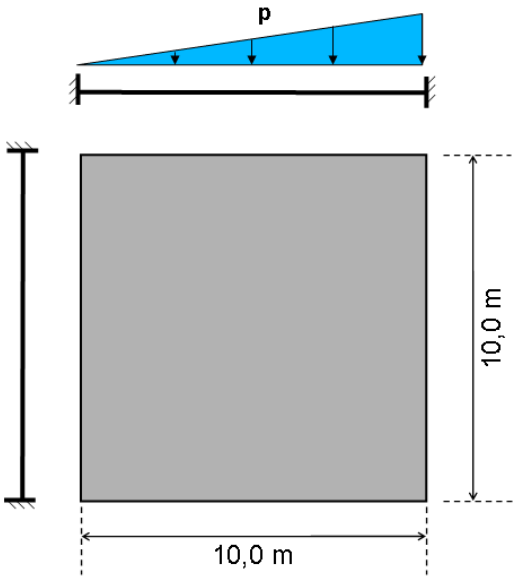 Top view (thickness = 22,0 cm)
Loads	Distributed load: q = -10 kN / m^2
Boundary Conditions	eX = eY = eZ = fiX = fiY= fiZ = 0 along all edges Nodal DOF: Plate in X-Y plane
Material Properties	E = 880 kN / cm^2 ν = 0,3
Element types	Plate element (Heterosis type)
Mesh	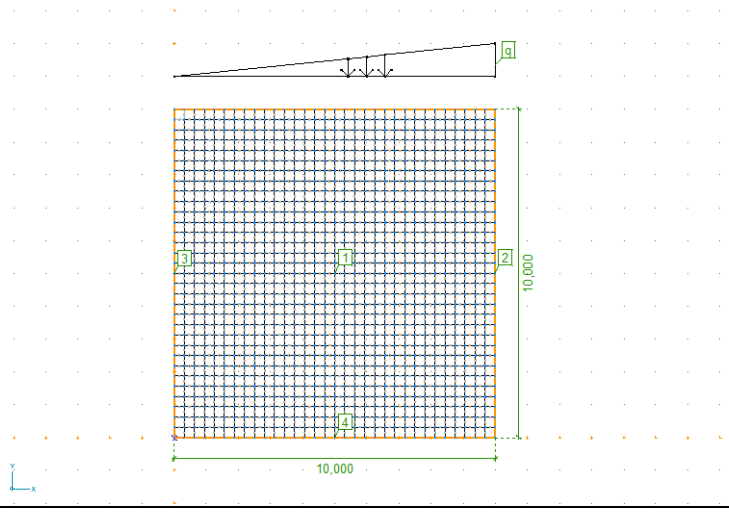

Target	m_x, m_y
Results	

Results	Theory	AxisVM	%
$m_{x,1}$ [kNm/m]	11,50	11,48	-0,17
$m_{y,1}$ [kNm/m]	11,50	11,48	-0,17
$m_{x,2}$ [kNm/m]	33,40	33,23	-0,51
$m_{x,3}$ [kNm/m]	17,90	17,83	-0,39
$m_{y,4}$ [kNm/m]	25,70	25,53	-0,66

Reference:

S. Timoshenko and S. Woinowsky-Krieger: Theory of Plates And Shells

Software Release Number: X7r1a
Date: 06. 02. 2023.
Tested by: InterCAD
File name: hemisphere.axs

Thema	Hemisphere displacement.
Analysis Type	Linear analysis.
Geometry	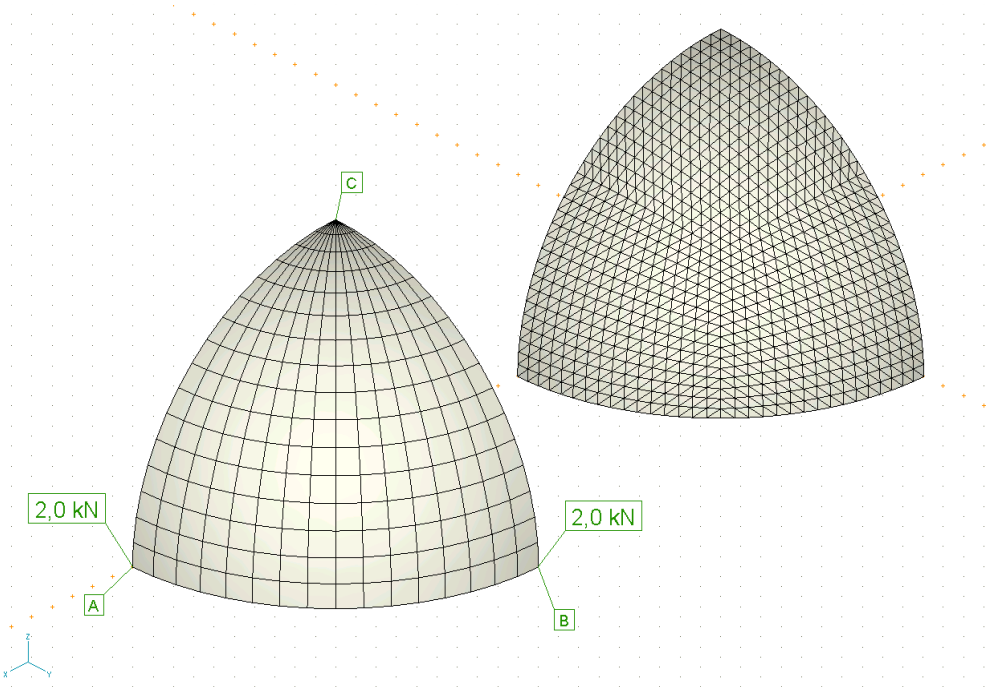 Hemisphere (Axonometric view) t = 0,04 m
Loads	Point load P = 2,0 kN 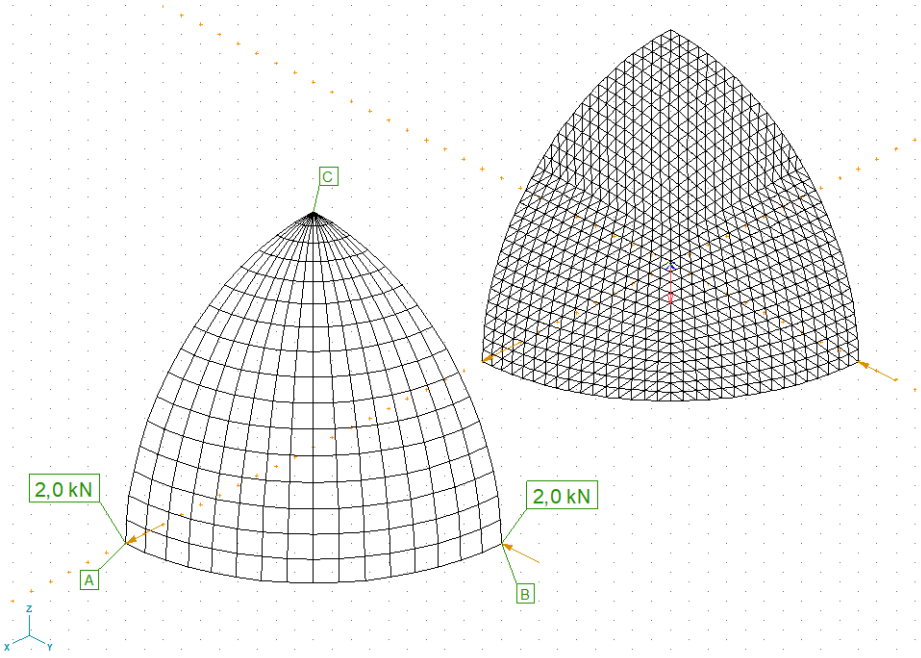

Boundary Conditions	eX = eY = eZ = fiX = fiY = fiZ= 0 at C Symmetry in X-Z plane on A-C edge Symmetry in Y-Z plane on B-C edge
Material Properties	E = 6825 kN / cm^2 ν = 0,3
Element types	Shell element 1.) guadrilateral parabolic 2.) triangle parabolic
Target	e_x at point A
Results	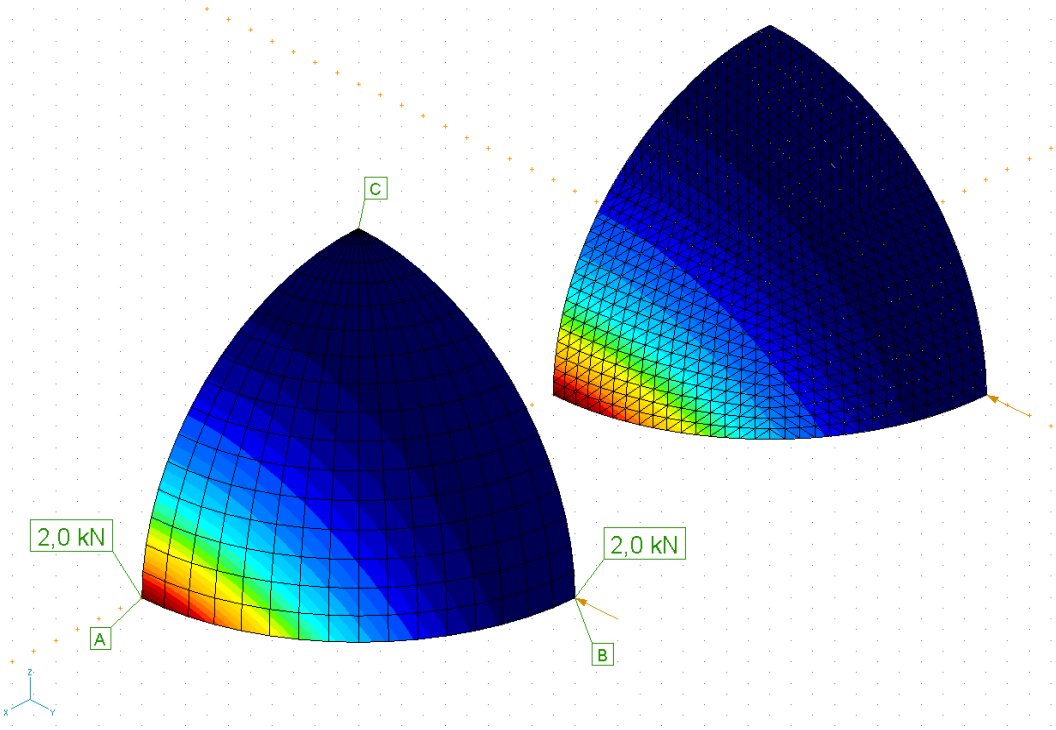

	e_x [m]	e [%]
Theory	0.185	
AxisVM quadrilateral	0.185	0.00
AxisVM triangle	0.182	-1.62

Software Release Number: X7r2a
Date: 26. 05. 2023.
Tested by: InterCAD
File name: soil1.axs

Thema	Strip loading on a semi-infinite elastic medium
Analysis Type	Linear analysis.
Geometry	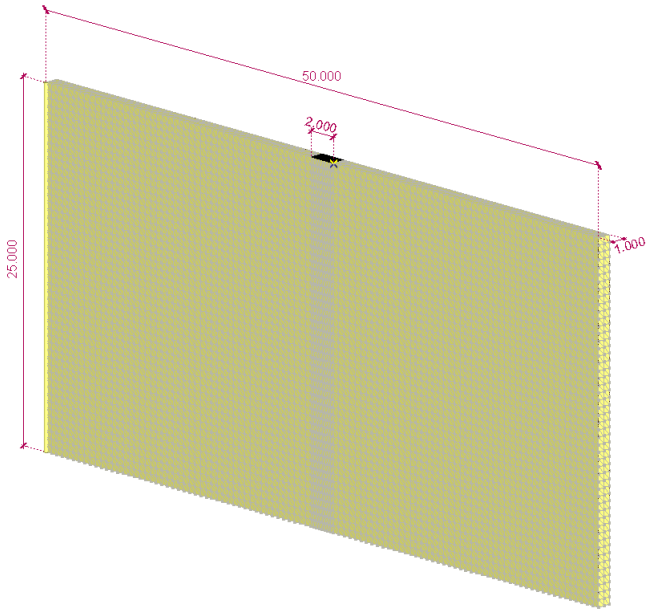 The model has a width of 50 m and a height of 25 m
Loads	Distributed load (P) = 1 MPa Load width (b) = 2 m
Boundary Conditions	eX = 0 at two sides eY = 0 at two sides eX = eY = eZ = 0 at the bottom
Material Properties	Compression modulus (Es) = 20000 MPa Poisson's ratio (v) = 0.2
Element types	A mesh of 10200 hexahedron elements was used.
Target	Szz soil stress is selected for comparison.

Results

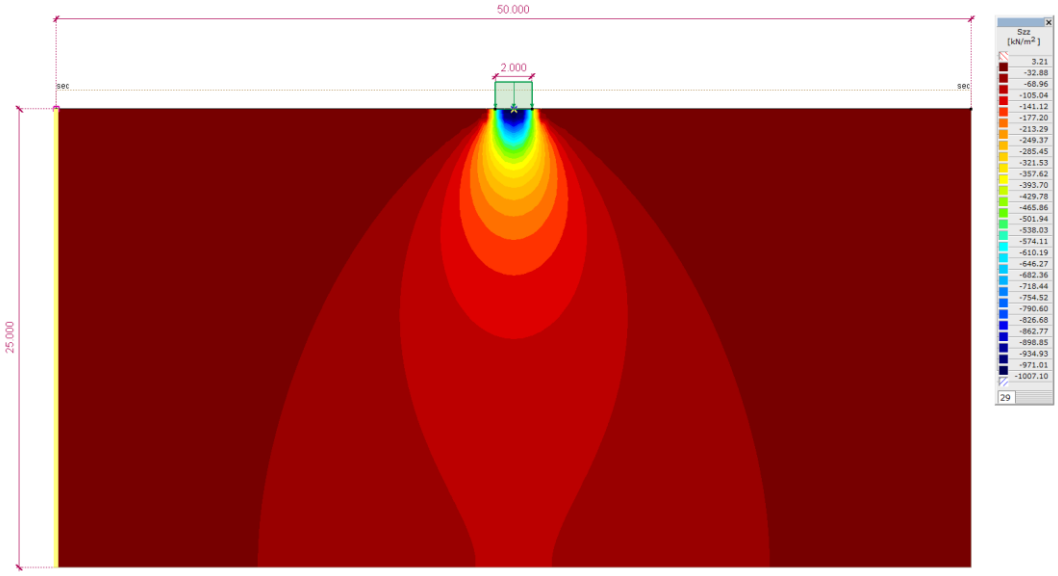

Depth [m]	AxisVM [kN/m2]	Theory [kN/m2]	[%]
0	1007.08	1000.00	0.71
0.49	978.57	961.49	1.78
0.98	830.11	824.68	0.66
1.47	673.72	676.36	0.39
1.96	554.77	558.06	0.59
2.45	466.92	469.44	0.54
2.94	401.07	402.81	0.43
4.41	278.96	279.26	0.11
5.88	212.95	212.47	0.23
8.33	152.98	151.40	1.04
9.8	131.33	129.03	1.78

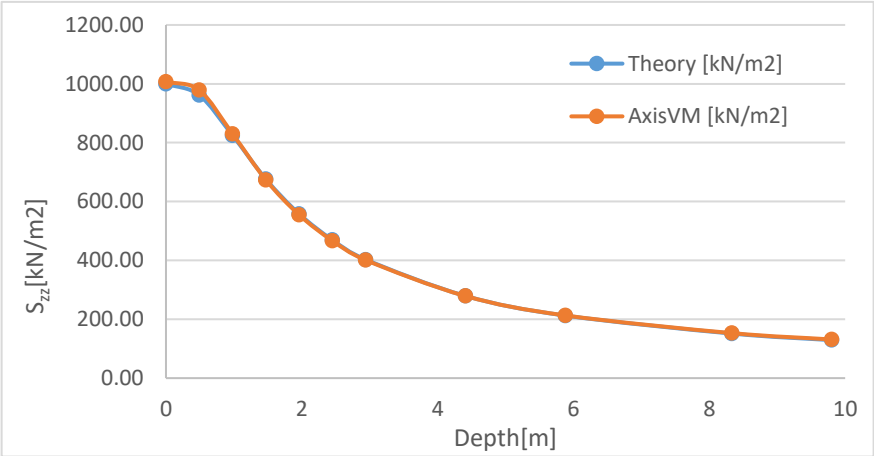

Software Release Number: X7r2a
Date: 26. 05. 2023.
Tested by: InterCAD
File name: soil2.axs

Thema	Circular loading on a semi-infinite elastic medium
Analysis Type	Linear analysis.
Geometry	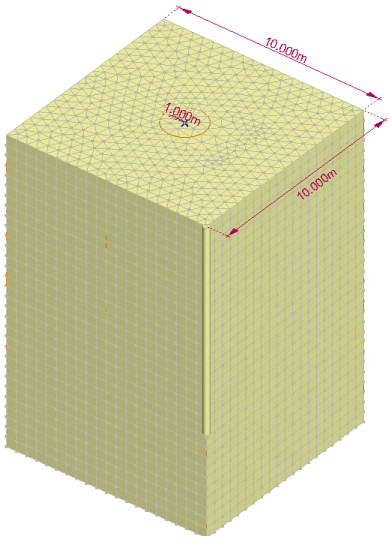
Loads	PZ=-100 kN/m^2 distributed load in the center distributed on a circular area (R=1m).
Boundary Conditions	eX = 0 at two sides eY = 0 at two sides eX = eY = eZ = 0 at the bottom
Material Properties	Compression modulus (Es) = 30 MPa Poisson's ratio (v) = 0.2
Element types	A mesh of 30008 wedge elements with average size of 0.5 m was used.
Target	Szz soil stress is selected for comparison.

Results

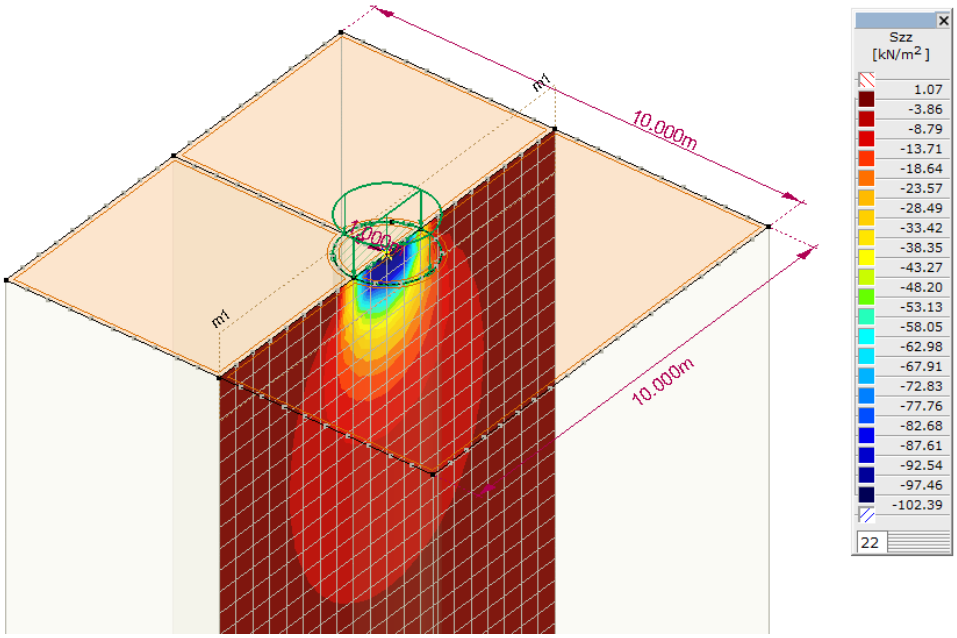

Depth [m]	AxisVM [kN/m2]	Theory [kN/m2]	[%]
0.48	95.18	91.73	3.76
0.97	67.19	66.35	1.26
1.45	43.51	44.14	1.42
1.94	29.37	29.86	1.66
2.42	20.82	21.06	1.14
2.90	15.43	15.47	0.27
3.87	9.49	9.24	2.75
4.84	6.60	6.08	8.55
6.77	4.25	3.18	33.56
9.68	3.35	1.58	111.93

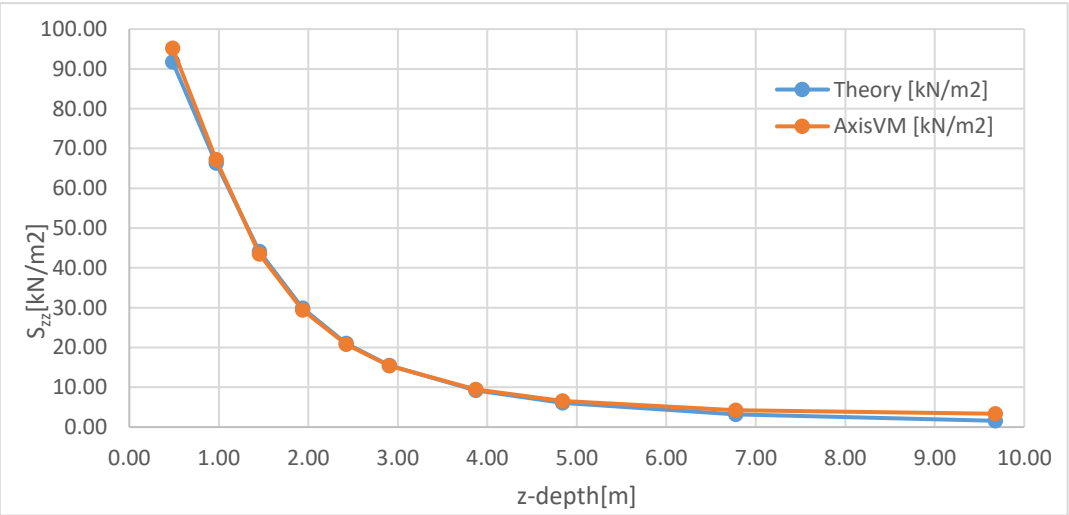

Software Release Number: X7r2a
Date: 26. 05. 2023.
Tested by: InterCAD
File name: soil3.axs

Thema	Rectangular loading on a semi-infinite elastic medium
Analysis Type	Linear analysis.
Geometry	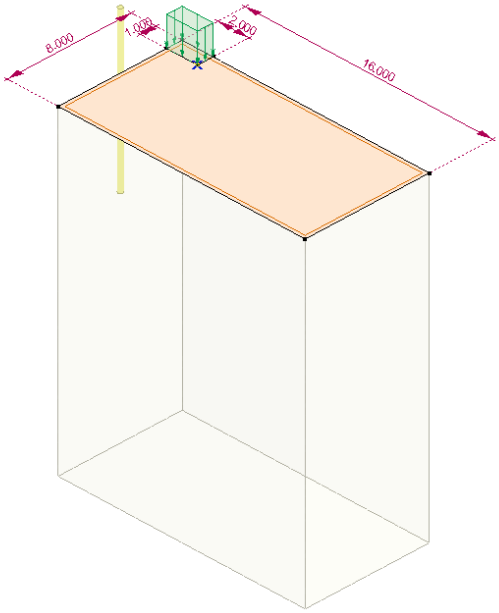
Loads	PZ=-150 kN/m^2 distributed load.
Boundary Conditions	eX = 0 at two sides eY = 0 at two sides eX = eY = eZ = 0 at the bottom
Material Properties	Compression modulus (Es) = 30 MPa Poisson's ratio (v) = 0.1
Element types	A mesh of 22714 hexahedron elements with average size of 0.5 m was used.
Target	Szz soil stress below the corner is selected for comparison.

Results

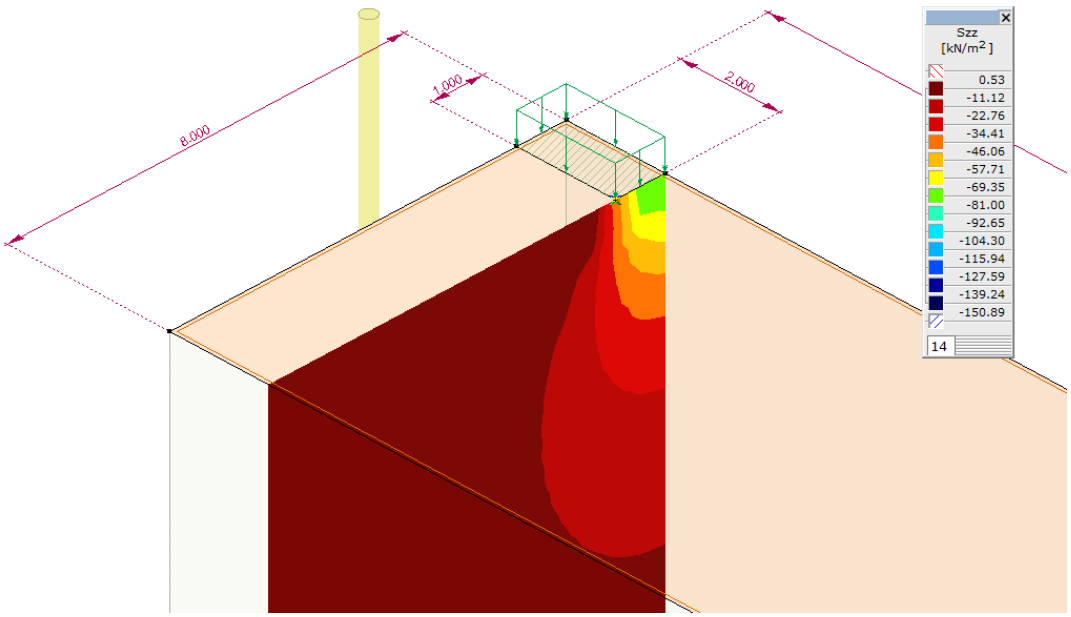

Depth [m]	AxisVM [kN/m2]	Theory [kN/m2]	[%]
0.49	36.91	37.27	0.97
0.98	36.03	35.97	0.18
1.46	33.55	33.47	0.22
1.95	30.36	30.32	0.14
2.44	27.03	27.01	0.08
2.93	23.88	23.86	0.09
4.39	16.37	16.29	0.49
6.34	10.40	10.16	2.41
8.78	6.64	6.13	8.35
10.24	5.41	4.72	14.56

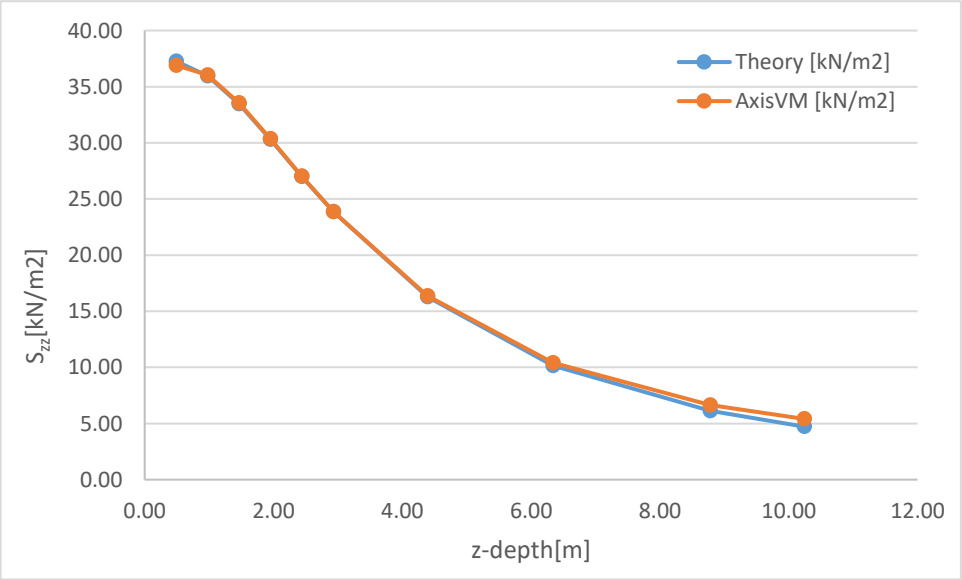

Software Release Number: X7r2a
Date: 26. 05. 2023.
Tested by: InterCAD
File name: soil4.axs

Thema	Rigid foundation on linear elastic soil
Analysis Type	Linear analysis.
Geometry	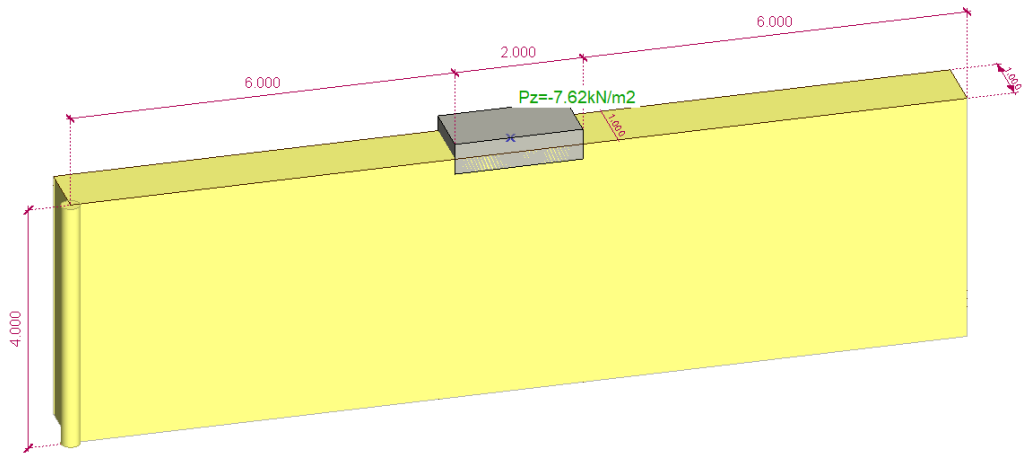
Loads	PZ=-7.62 kN/m^2 distributed load.
Boundary Conditions	eX = 0 at two sides eY = 0 at two sides eX = eY = eZ = 0 at the bottom
Material Properties	Compression modulus (Es) = 1.33 MPa Poisson's ratio (v) = 0.33
Element types	A mesh of 10846 wedge elements with average size of 0.25 m was used.
Target	The vertical stress distribution under the footing.
Results	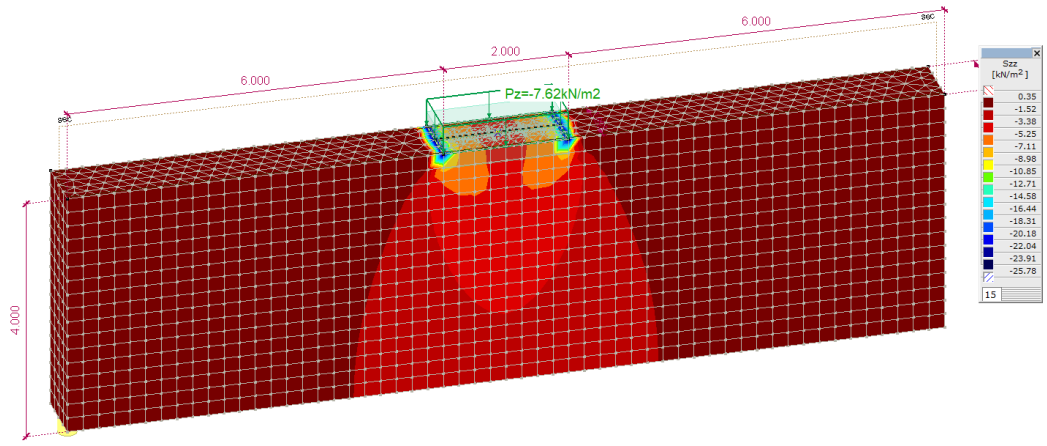

x[m]	AxisVM [kN/m2]	Theory [kN/m2]	[%]
0	-4.94	-4.85	1.83
0.1	-4.96	-4.88	1.73
0.2	-5.03	-4.95	1.59
0.3	-5.14	-5.09	1.08
0.4	-5.31	-5.29	0.32
0.5	-5.57	-5.60	0.56
0.6	-5.95	-6.06	1.88
0.7	-6.58	-6.79	3.13
0.8	-7.69	-8.09	4.89
0.9	-10.66	-11.13	4.21

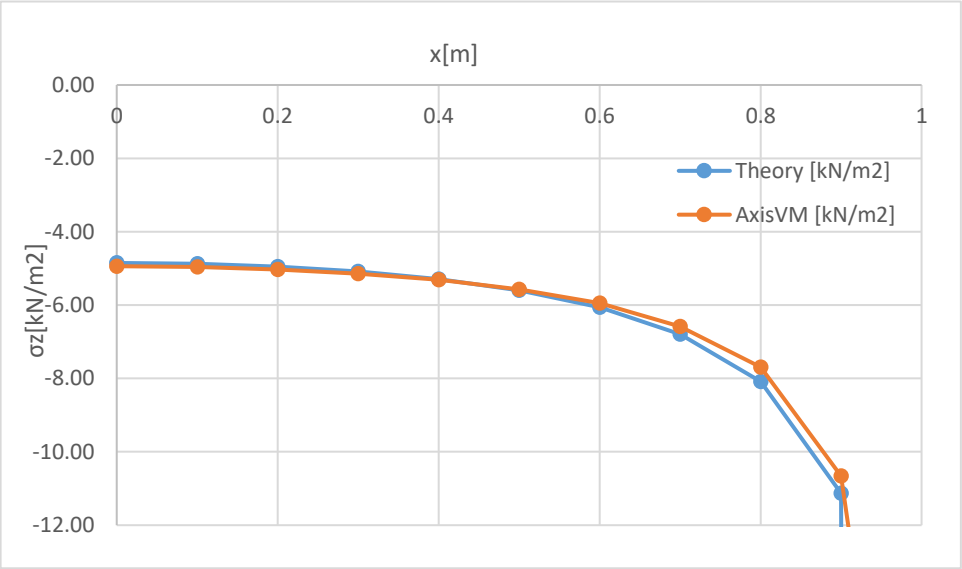

Software Release Number: X7r2a
Date: 26. 05. 2023.
Tested by: InterCAD
File name: soil5.axs

Thema	Circular foundation on linear elastic soil
Analysis Type	Linear analysis.
Geometry	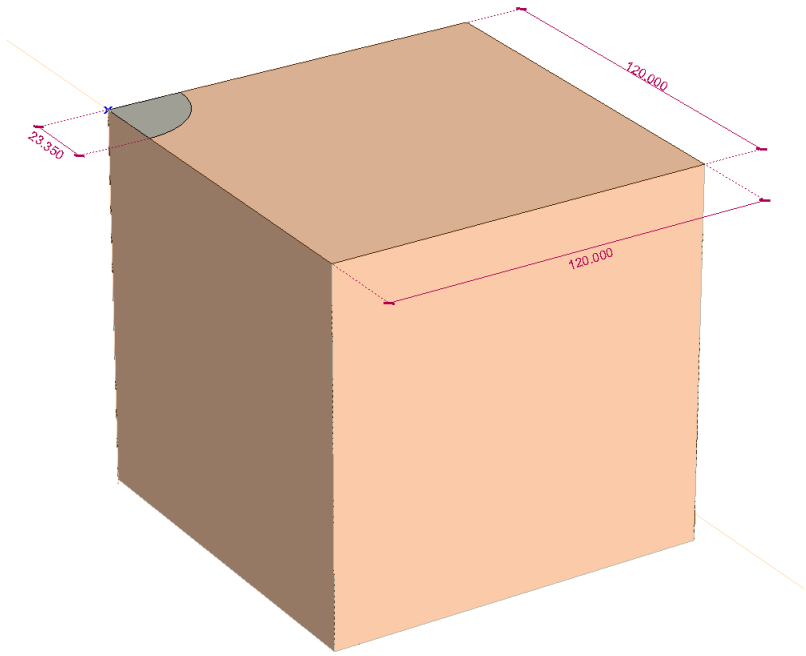
Loads	PZ=-263.3 kN/m^2 distributed load.
Boundary Conditions	eX = 0 at two sides eY = 0 at two sides eX = eY = eZ = 0 at the bottom
Material Properties	Young's modulus (E) = 95.8 MPa Poisson's ratio (v) = 0.499
Element types	A mesh of 183570 tetrahedron elements with average size of 4 m was used.
Target	Maximum settlement.

Results

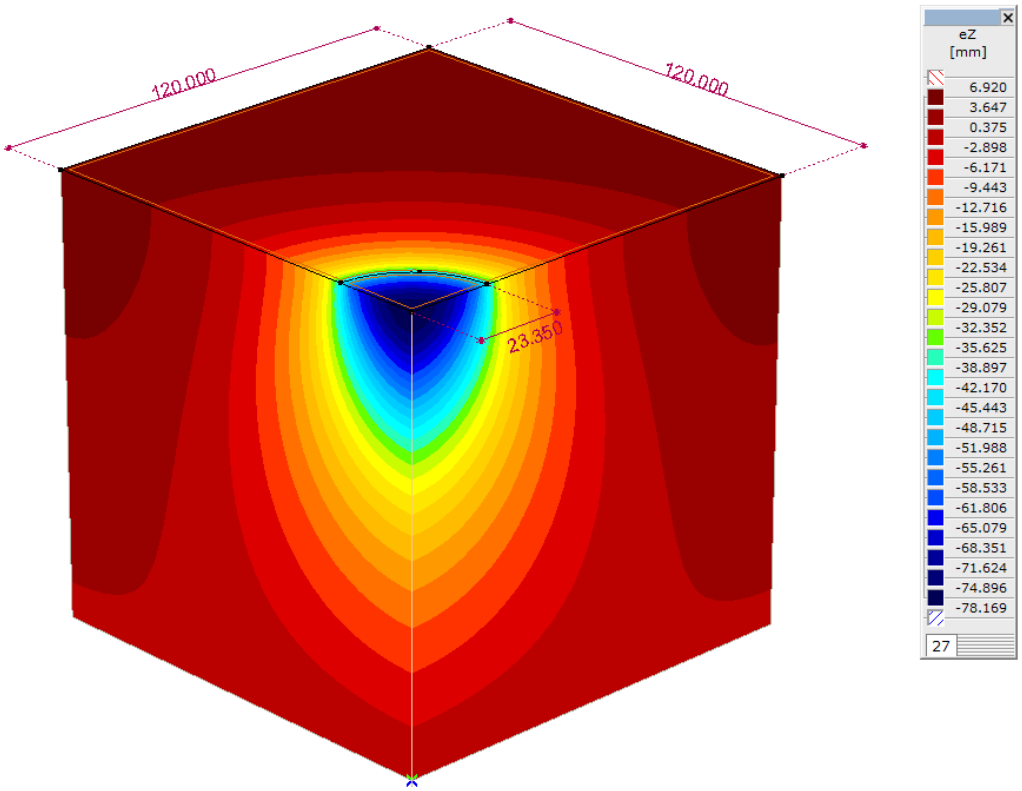

	e_z [mm]
Theory	74.4
Plaxis 3D	75.6
AxisVM	78.2

Nonlinear static

Software Release Number: X4r1
Software Release Number: X7r1a
Date: 06. 02. 2023.
Tested by: InterCAD
File name: nonlin1.axs

Thema	3D beam structure.
Analysis Type	Geometrical nonlinear analysis.
Geometry	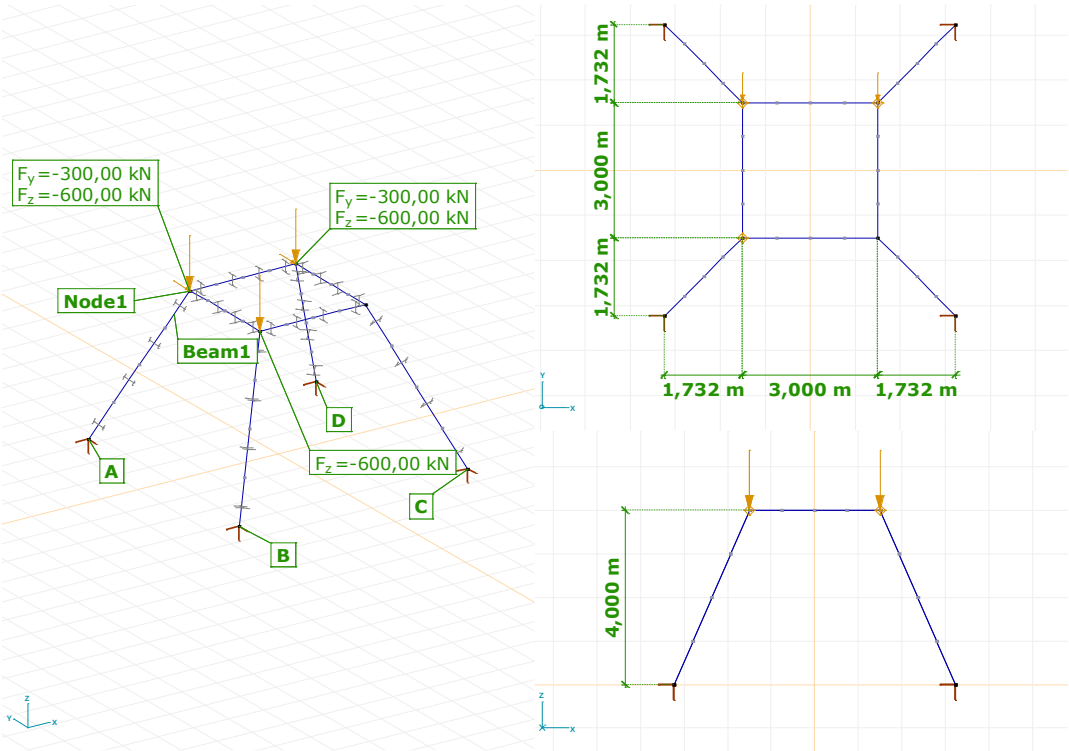
Loads	Py = -300 kN Pz = -600 kN
Boundary Conditions	eX = eY = eZ = 0 at A, B, C and D
Material Properties	S 275 E = 21000 kN / cm^2 ν = 0,3
Cross-Section Properties	HEA 300 Ax = 112.56 cm^2 ; Ix = 85.3 cm^4 ; Iy = 18268.0 cm^4 ; Iz = 6309.6 cm^4
Element types	Beam
Target	eX, eY, eZ, at Node1 Nx, Vy, Vz, Tx, My, Mz of Beam1 at Node1

Results	Comparison with the results obtained using Nastran V4

Component	Nastran®	AxisVM	%
eX [mm]	17,898	17,881	-0,09
eY [mm]	-75,702	-75,663	-0,05
eZ [mm]	-42,623	-42,597	-0,06
Nx [kN]	-283,15	-283,25	0,04
Vy [kN]	-28,09	-28,10	0,04
Vx [kN]	-106,57	-106,48	-0,08
Tx [kNm]	-4,57	-4,57	0,00
My [kNm]	-519,00	-518,74	-0,05
Mz [kNm]	148,94	148,91	-0,02

Software Release Number: X7r1a
Date: 06. 02. 2023.
Tested by: InterCAD
File name: nonlin2.axs

Thema	Plate with fixed end and bending moment.
Analysis Type	Geometrical nonlinear analysis.
Geometry	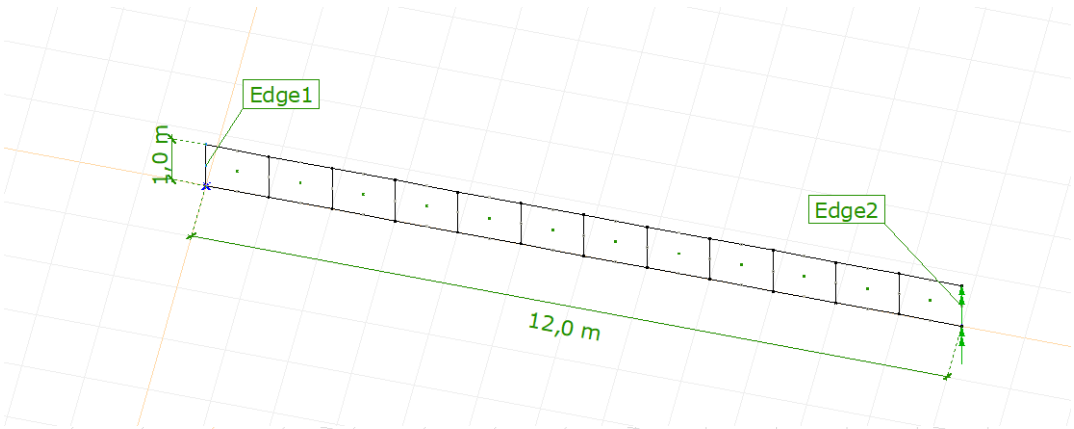 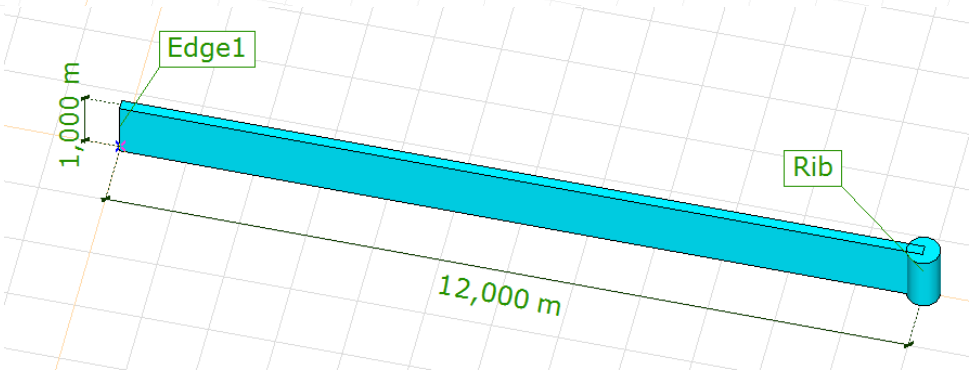
Loads	Mz = 2600 kNm (2x1300 Nm) acting on Edge2
Boundary Conditions	eX = eY = eZ = fiX = fiY = fiZ = 0 along Edge1 (Use Constrained nodes instead of line support; Nodal DOF on Edge 1: Fixed node)
Material Properties	E = 20000 N / mm^2 ν = 0
Cross Section Properties	Plate thickness: 150 mm Rib on Edge2: circular D = 500 mm (for distributing load to the mid-side-node)
Element types	Parabolic quadrilateral shell (heterosis type) Rib on Edge2 for distributing load to the mid-side-node

Target	φ_z at Edge2
Results	

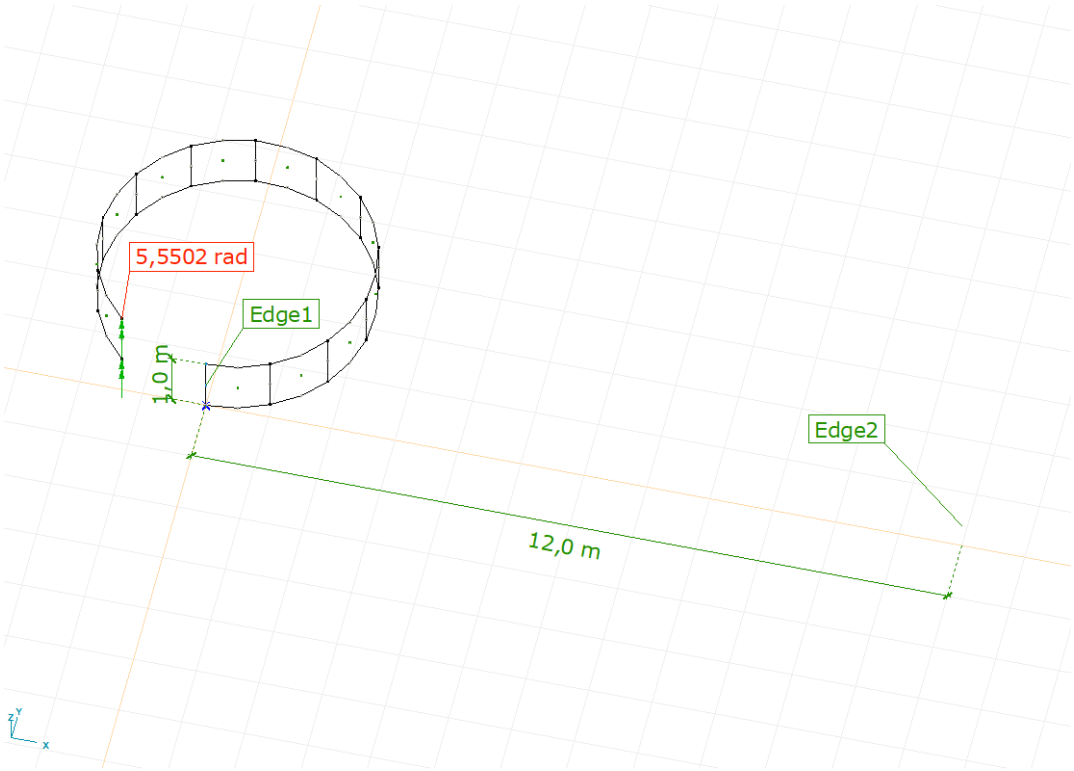

Theoretical results based on the differential equation of the flexible beam:

$$\left.\begin{aligned} \kappa &= \frac{M}{I_{plate}E_{plate}} \\ \varphi_z &= \kappa \cdot \ell_{plate} \end{aligned}\right\} \rightarrow \varphi_z = \frac{M\,\ell_{plate}}{I_{plate}E_{plate}}$$

$$I_{plate} = \frac{a\,b^3}{12} = \frac{1 \cdot 0.15^3}{12} = 2.8125 \cdot 10^{-4}$$

$$E_{plate} = 2 \cdot 10^{10}\ N/m^2$$

$$\ell_{plate} = 12\ m$$

$$M = 2.6 \cdot 10^6\ Nm$$

$$\varphi_z = \frac{2.6 \cdot 10^6 \cdot 12}{2.8125 \cdot 10^{-4} \cdot 2 \cdot 10^{10}} = 5.5467\ rad$$

Comparison the AxisVM result with the theoretical one:

Component	Theory	AxisVM	%
fiZ [rad]	5,5467	5,5502	0,06

Software Release Number: X7r1a
Date: 06. 02. 2023.
Tested by: InterCAD
File name: Plastic_1.axs

Thema	Plastic material
Analysis Type	Nonlinear static analysis
Geometry	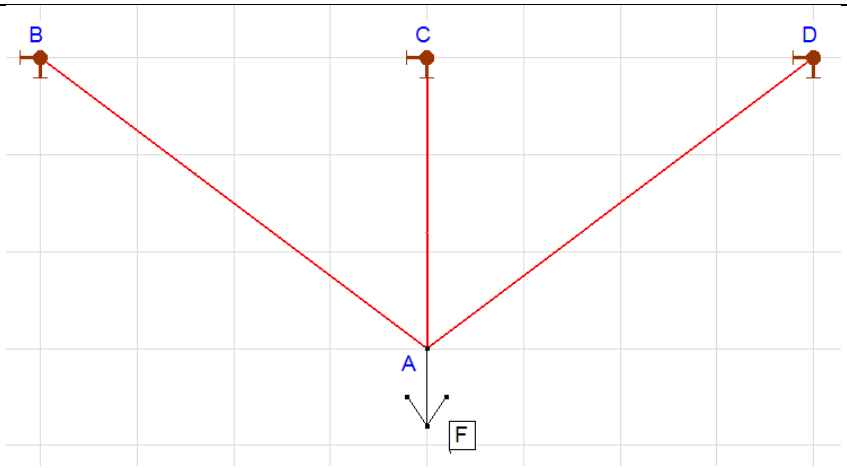 Cross-section: D = 30mm
Loads	Axial force at A: N Solution control: Displacement at A
Boundary Conditions	eX = eY = eZ = 0 at B, C and D
Material Properties	S 235 E = 21000 kN / cm² ν = 0,3 Linear elastic – perfectly plastic material model
Element types	Truss element
Target	Check the load – vertical displacement (A) curve
Results	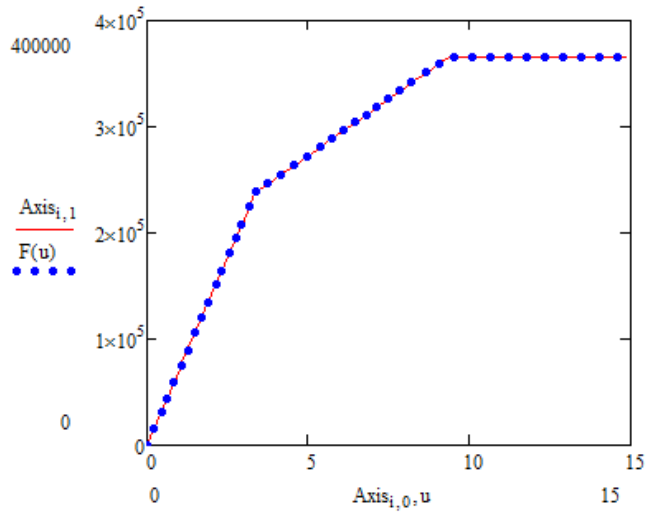 Analytical results: [u;F(U)] AxisVM: [$Axis_{i,1}$; $Axis_{i,0}$]

Software Release Number: X7r1a
Date: 06. 02. 2023.
Tested by: InterCAD
File name: Plastic_2.axs

Thema	Clamped beam with plastic material under cyclic loading
Analysis Type	Nonlinear static analysis
Geometry	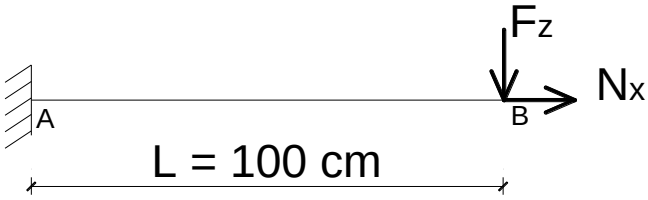 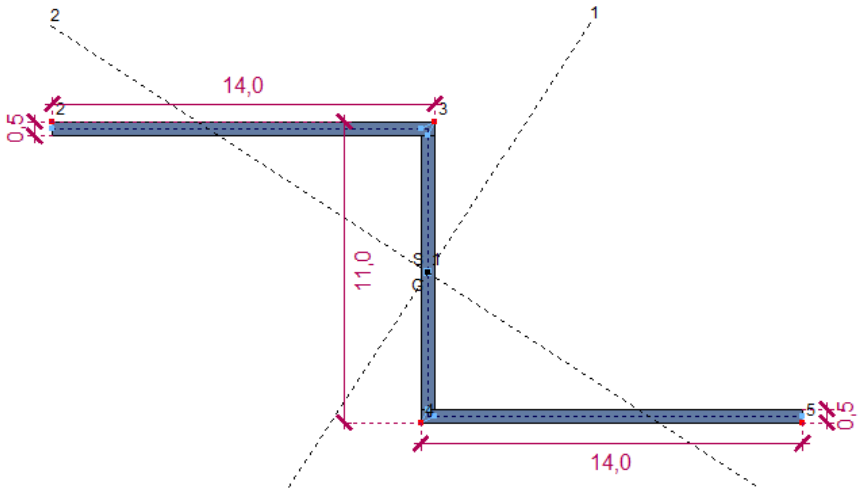 Cross-section: Z = 30mm
Loads	N_x = 63,333 kN; Fz = 2,666 kN Solution control: Displacement at B ez = -70 mm Increment function: 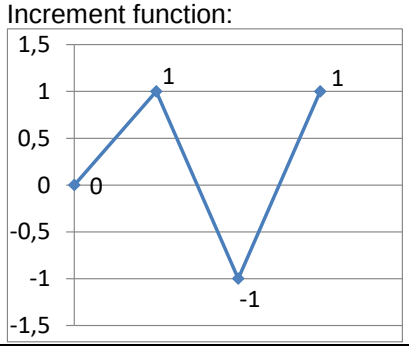
Boundary Conditions	eX = eY = eZ = fiX = fiY = fiZ = 0 at A
Material Properties	Steel E = 100000 kN/cm^2; E_T = 1000 kN/cm^2; σ_y = 10 kN/cm^2 ν = 0,3 Linear elastic –plastic material model Hardening rule: Isotropic hardening 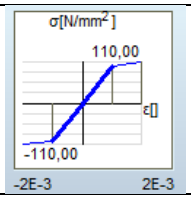
Element types	Beam element
Target	Check the load –displacements and beam strains curves
Results	AxisVM: • Beam element

- Rib element (shear deformation is taken into account)
- ANSYS 14.0 – Beam element (unrestrained warping)

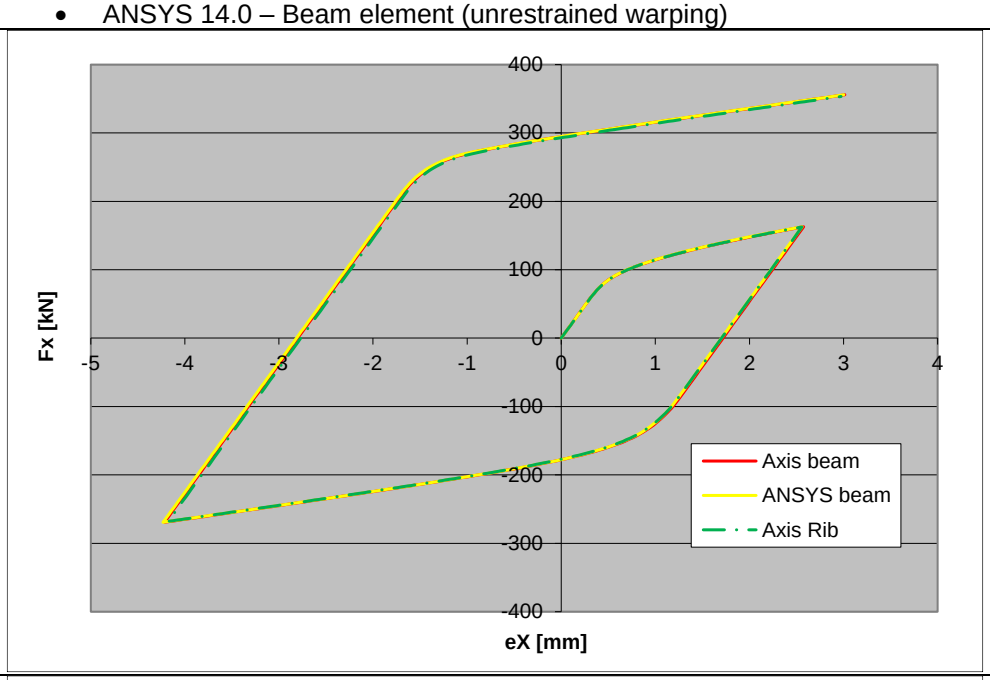

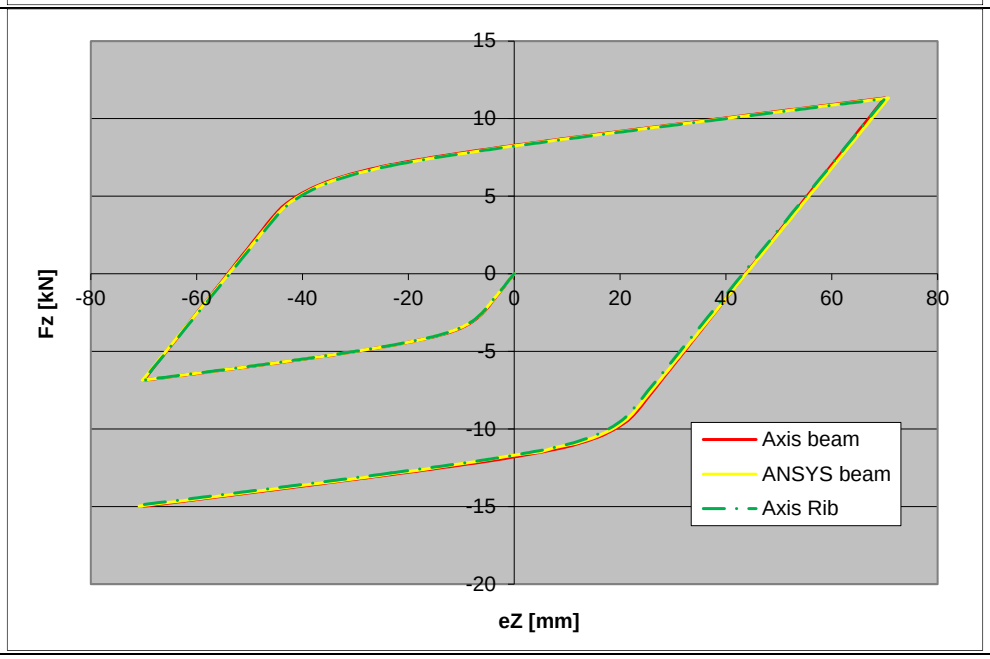

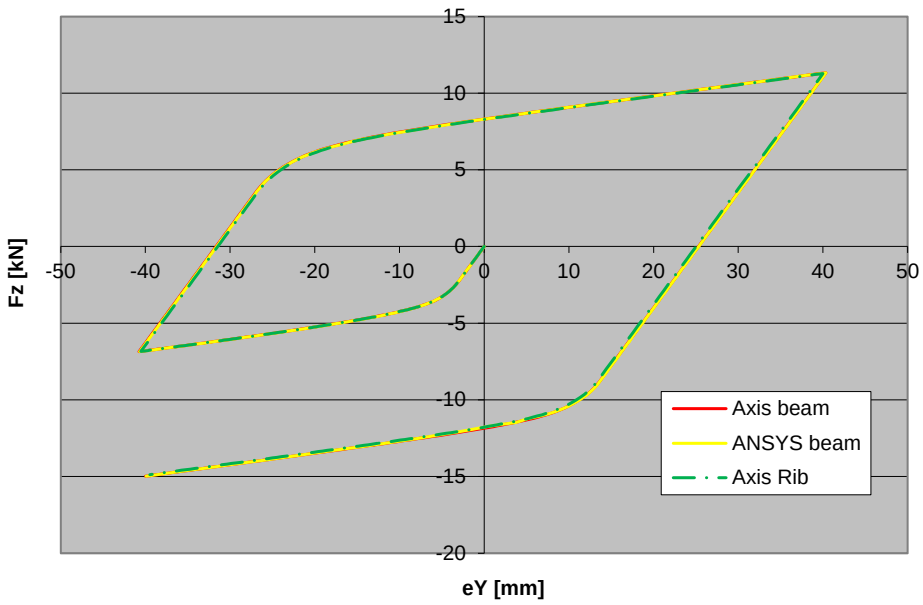
15
10
5
0
-5
-10
-15
-20
-50
-40
-30
-20
-10
0
10
20
30
40
50
Fz [kN]
eY [mm]
Axis beam
ANSYS beam
Axis Rib

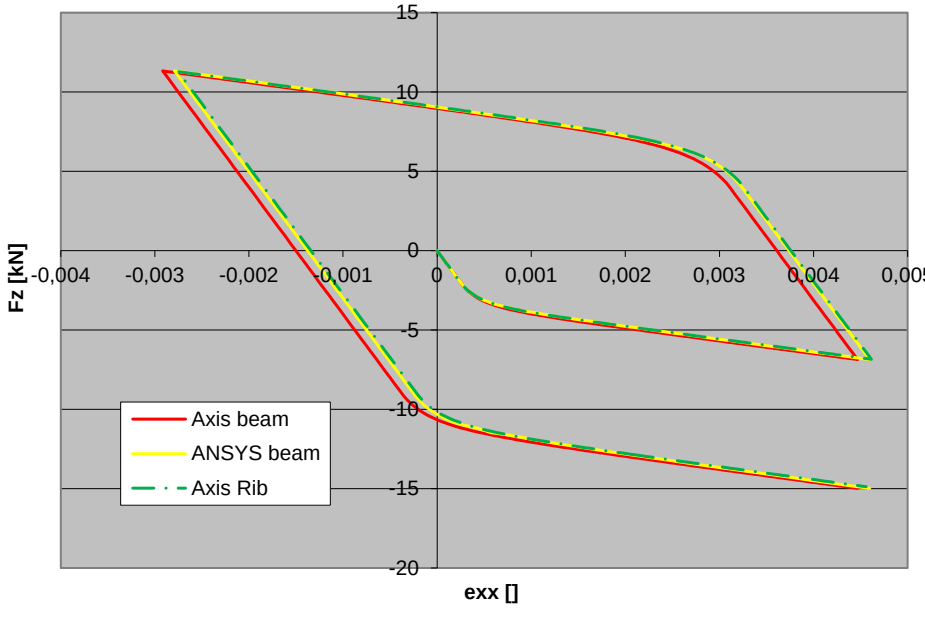
15
10
5
0
-5
-10
-15
-20
-0,004
-0,003
-0,002
-0,001
0
0,001
0,002
0,003
0,004
0,005
Fz [kN]
exx []
Axis beam
ANSYS beam
Axis Rib

Software Release Number: X7r1a
Date: 06. 02. 2023.
Tested by: InterCAD
File name: matnl_01_xx (*xx – element type*)

Thema	Clamped beam with *symmetric nonlinear* material model
Analysis Type	Nonlinear static analysis
Geometry	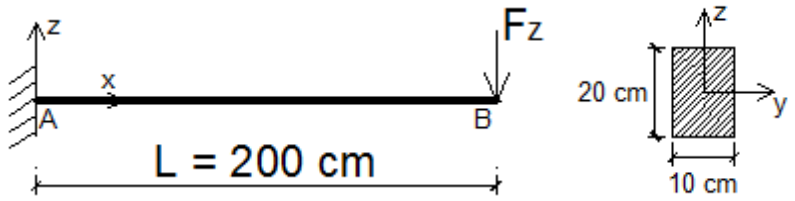
Loads	Fz = 200 kN Solution control: Force Increment function: Equal increments
Boundary Conditions	eX = eY = eZ = fiX = fiY = fiZ = 0 at A
Material Properties	Steel – Strain energy based (*NLE*) Steel – Von Mises (*VM*) Material model function: $\sigma = 400 \cdot \sqrt{\varepsilon}$ Discrete function assignment per ε = 0.001 [] ν = 0,3 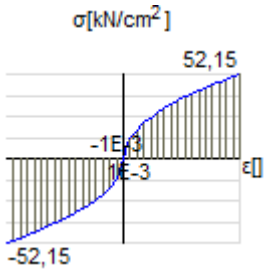
Element types / File name	Beam/Rib element: *matnl_01_beam-rib_NLE.axs*, *matnl_01_beam-rib_VM.axs* Plate element (heterosis type): *matnl_01_plate_NLE.axs*, *matnl_01_plate_VM.axs* Membrane element: *matnl_01_membrane_NLE.axs*, *matnl_01_membrane_VM.axs*
Target	Check vertical displacements (B) and stresses (A)

Results

Analytical background: Appendix A;

Yield criterion	***Strain energy based***		***Von Mises***	
Type of element	e_B [mm]	[%]	e_B [mm]	[%]
Analytical	156,4		156,4	
Beam	157,99	1,02	157,99	1,02
Rib	158,48	1,33	158,48	1,33
Plate TRIA	158,98	1,65	157,96	1,00
Membrane TRIA	158,34	1,24	158,41	1,29

Yield criterion	***Strain energy based***		***Von Mises***	
Type of element	σ_A [kN/cm^2]	[%]	σ_A [kN/cm^2]	[%]
Analytical	50		50	
Beam	49,9	-0,20	48,9	-2,20
Rib	49,9	-0,20	48,9	-2,20
Plate TRIA	49,79	-0,42	49,83	-0,34
Membrane TRIA	49,87	-0,26	48,24	-3,52

Software Release Number: X7r1a
Date: 06. 02. 2023.
Tested by: InterCAD
File name: matnl_02_xx (xx – element type)

Thema	Clamped beam with *asymmetric nonlinear* material model
Analysis Type	Nonlinear static analysis
Geometry	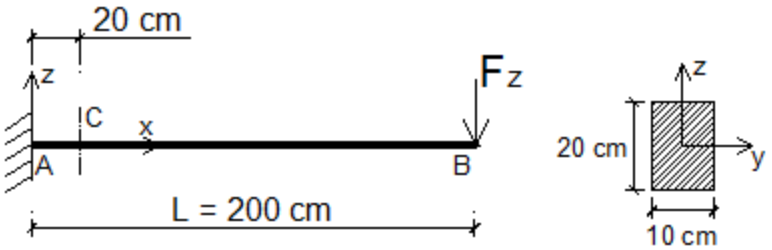
Loads	Fz = 1200 N; Solution control: Force Increment function: Equal increments
Boundary Conditions	eX = eY = eZ = fiX = fiY = fiZ = 0 at A
Material Properties	Strain energy based (*NLE*) E = 28600 N/mm²; E_T = 0 N/mm²; σ_{yT} = 1,6 N/mm²; σ_{yC} = 16 N/mm²; ν = 0; 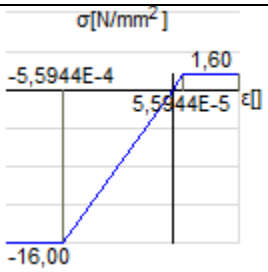
Element types / File name	Beam/Rib element — *matnl_02_beam-rib_NLE.axs* Shell element (heterosis type) — *matnl_02_shell_NLE.axs*
Target	Check vertical displacements (B) and stresses (C), length of plastic zone (x)

Results

Analytical background: Appendix A;

Yield criterion	***Strain energy based***	
Type of element	e_B [mm]	[%]
Analytical	2,833	
Beam	2,810	-0,81
Rib	2,830	-0,11
Shell	2,899	2,33

Yield criterion	***Strain energy based***	
Type of element	$\sigma_{C,min}$ [kN/cm²]	[%]
Analytical	4,98	
Beam	5,03	1,20
Rib	4,90	-1,81
Shell	5,01	0,60

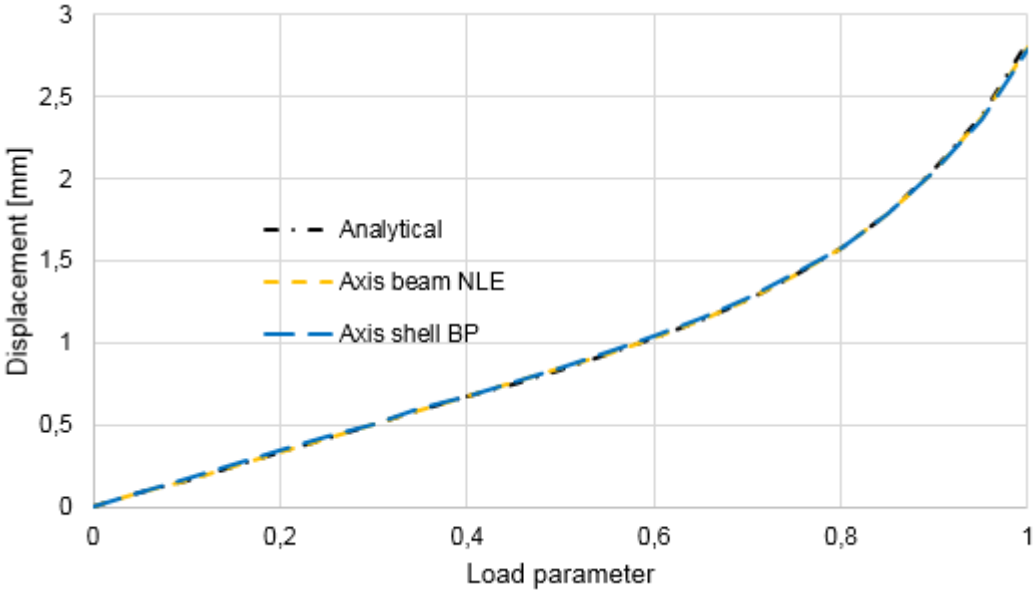

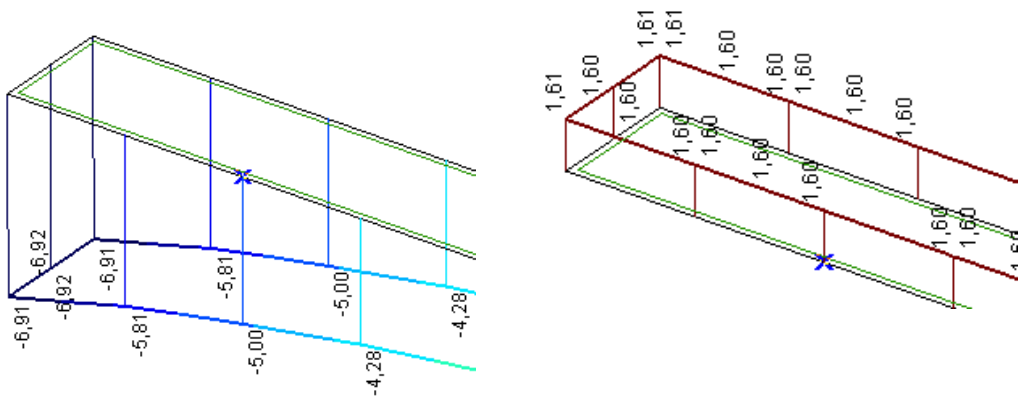

Axis shell NLE model – top and bottom S_{xx} [N/mm²]

Effective plastic strain of Beam and shell (top) with NLE material
Analytical result for ***x*** = 1,111 m (plastic zone)

Software Release Number: X7r1a
Date: 06. 02. 2023.
Tested by: InterCAD
File name: matnl_03_xx (xx – element type)

Thema	Clamped beam with *only compression* material model
Analysis Type	Nonlinear static analysis
Geometry	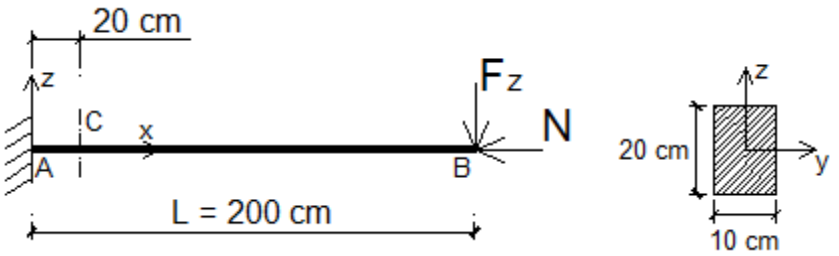
Loads	Fz =200 N; N = 5000 N Solution control: Force Increment function: Equal increments
Boundary Conditions	eX = eY = eZ = fiX = fiY = fiZ = 0 at A
Material Properties	Concrete – Bresler-Pister (*BP*) Other – Strain energy based (*NLE*) E = 28600 N/mm²; E_T = 0 N/mm²; σ_{yT} = 0,016 N/mm²; σ_{yC} = 16 N/mm²; C_{yB} = 1,2 (Bresler-Pister); ν = 0; 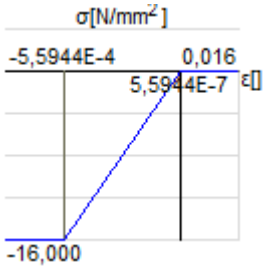
Element types / File name	Beam/Rib element: *matnl_03_beam-rib_NLE.axs*, *matnl_03_beam-rib_BP.axs* Shell element (heterosis type): *matnl_03_shell_NLE.axs*, *matnl_03_shell_BP.axs*
Target	Check vertical displacements (B) and stresses (C), length of plastic zone (x)

Results

Analytical background: Appendix A;

Yield criterion	***Strain energy based***		***Bresler Pister***	
Type of element	e_B [mm]	[%]	e_B [mm]	[%]
Analytical	0,475		0,475	
Beam	0,471	-0,84	0,466	-1,89
Rib	0,477	0,42	0,473	-0,42
Shell	0,486	2,32	0,471	-0,84

Yield criterion	***Strain energy based***		***Bresler Pister***	
Type of element	$\sigma_{C,min}$ [N/mm²]	[%]	$\sigma_{C,min}$ [N/mm²]	[%]
Analytical	1,097		1,097	
Beam	1,094	-0,27	1,086	-1,00
Rib	1,068	-2,64	1,066	-2,83
Shell	1,087	-0,91	1,076	-1,91

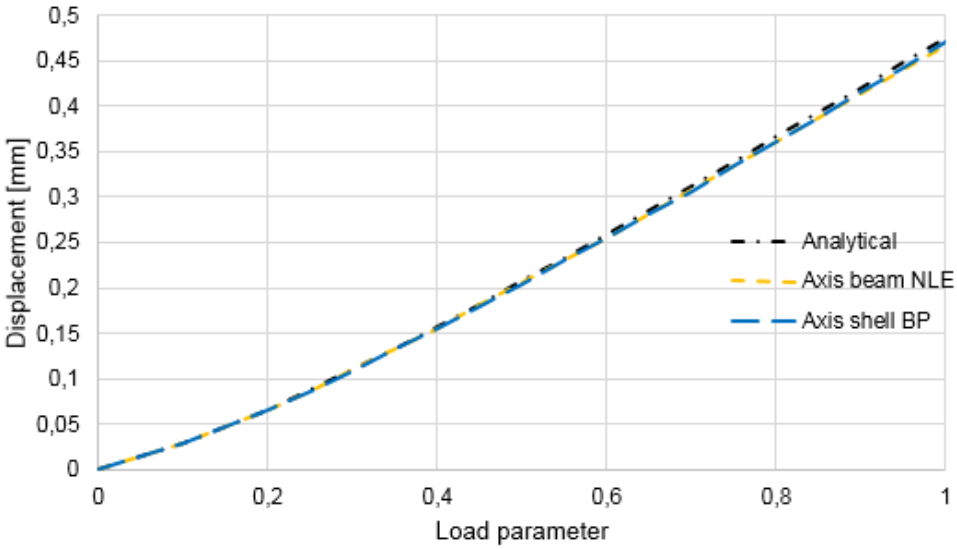

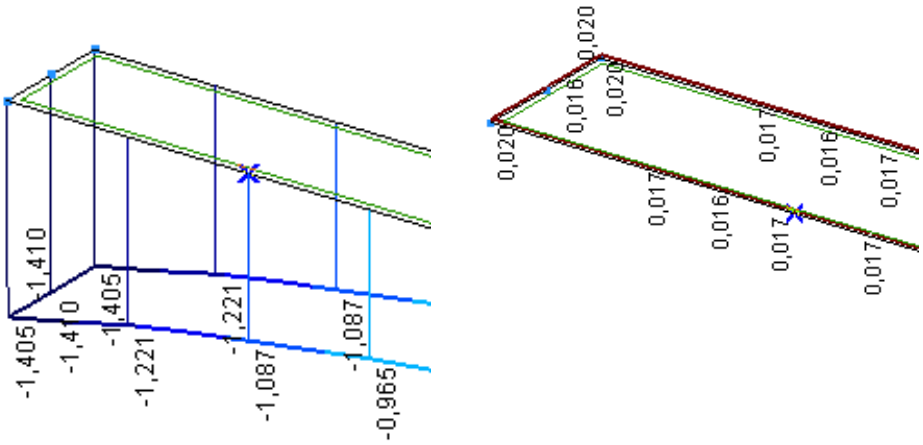

Axis shell NLE model – top and bottom S_{xx} [N/mm²]

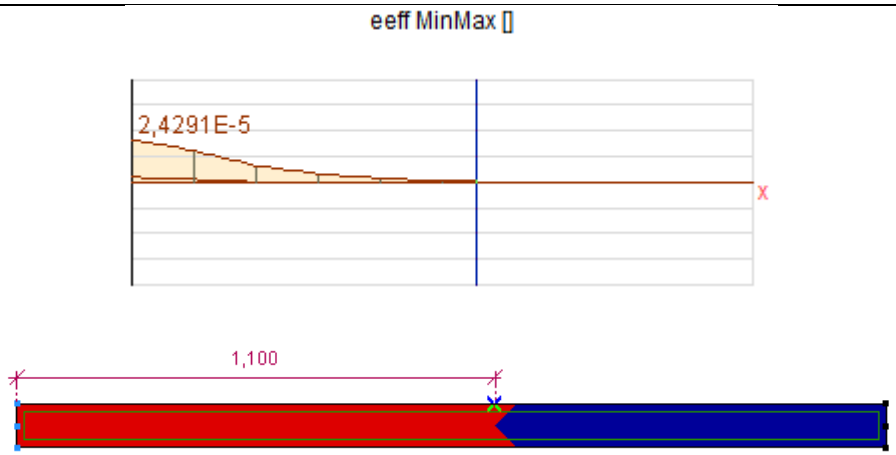

Effective plastic strain of Beam (fig. 1) and Shell (top) (fig. 2) with Bresler-Pister material

Analytical result for ***x*** = 1,110 m (plastic zone)

Software Release Number: X7r1a
Date: 06. 02. 2023.
Tested by: InterCAD
File name: push_2D_RC_frame.axs

Thema	Pushover – 2D frame
Analysis Type	Nonlinear static analysis
Geometry	three bays with 6m width and 4m height 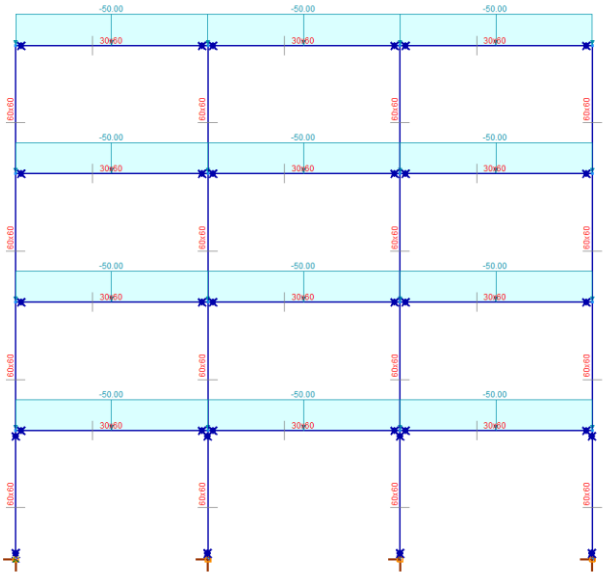
Loads	50 kN/m distributed load on the beams
Boundary Conditions	rigid supports the calculation must be run with the number of increments set to 70
Material Properties	C25/30 concrete
Elements	Beam elements: beam section: 30x60 cm rectangular; column section: 60x60 cm square Plastic hinges at beam ends: • moment resistance: 360 kNm initially, then 72 kNm • no hardening, sudden loss of strength • infinite rotation capacity 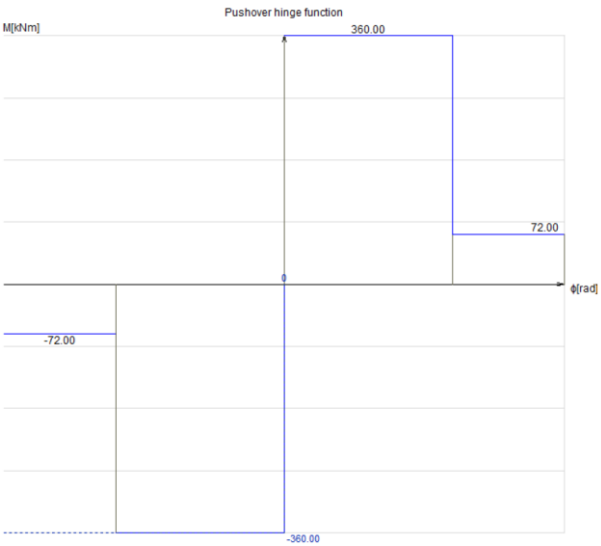

	Plastic hinges at column bases: • moment resistance: 800 kNm initially, then 160 kNm • no hardening, sudden loss of strength • infinite rotation capacity 
Target	Pushover analysis – 600 mm top displacement Comparison with SAP 2000 results
Results	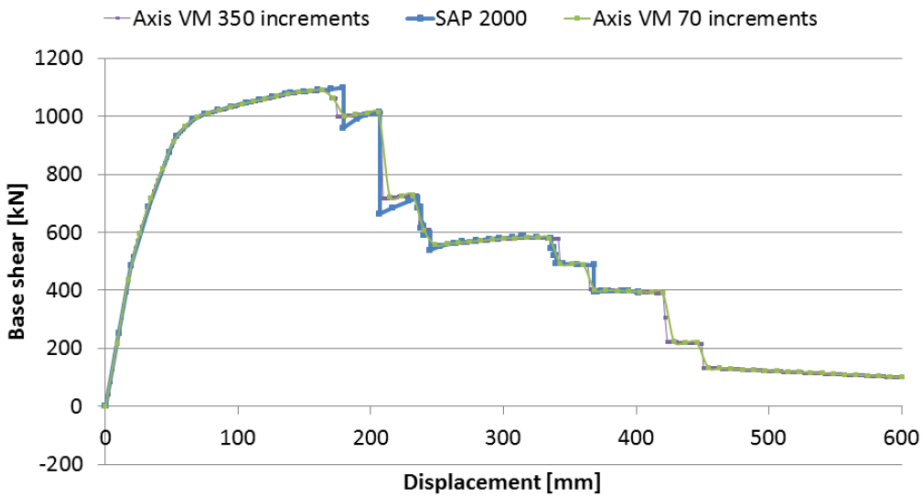

Software Release Number: X7r1a
Date: 06. 02. 2023.
Tested by: InterCAD
File name: push_3D_RC_frame.axs

Thema	Pushover – 3D frame
Analysis Type	Nonlinear static analysis
Geometry	two bays in x (6m and 5m) and three bays in y (5m, 6m and 4m) direction 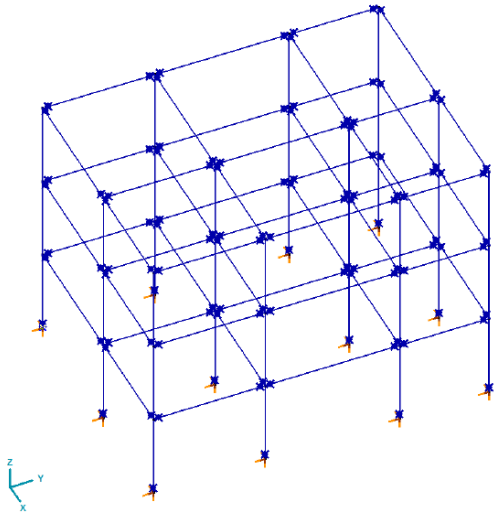
Loads	25 kN/m distributed load on the beams
Boundary Conditions	rigid supports
Material Properties	C25/30 concrete
Elements	Beam elements: beam section: 30x60 cm rectangular; column section: 60x60 cm square Plastic hinges at beam ends: • moment resistance: 360 kNm initially, then 72 kNm • no hardening, sudden loss of strength • infinite rotation capacity 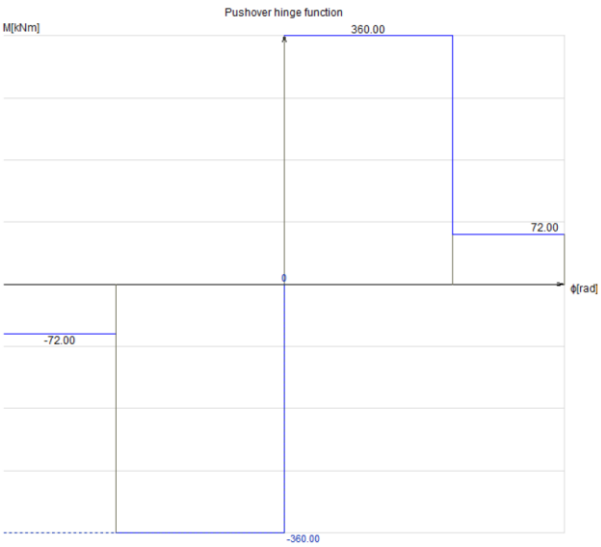 Plastic hinges at column bases:

- moment resistance: 2500 kNm initially, then 2000 kNm
- no hardening, relaxed loss of strength
- infinite rotation capacity

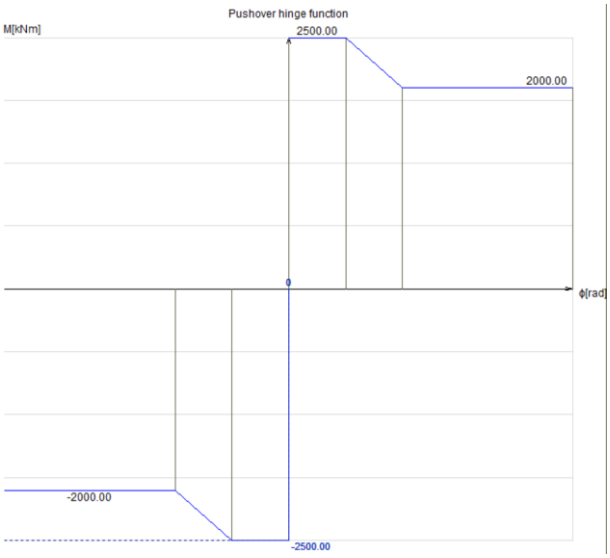

Target	Pushover analysis Comparison with SAP 2000 results
Results – X direction	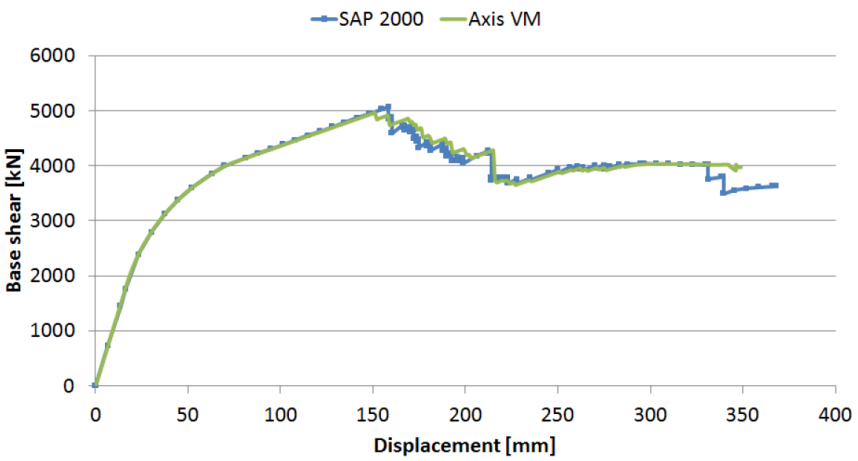
Results – Y direction	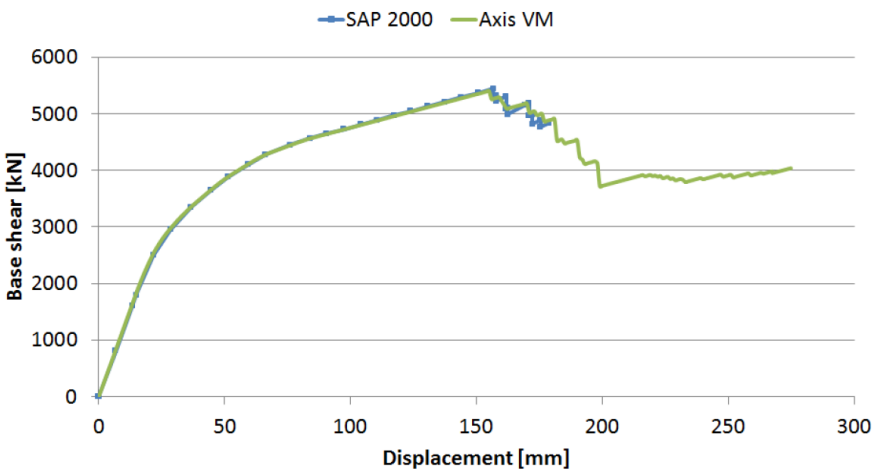

BLANK

Dynamic

Software Release Number: X7r1a
Date: 06. 02. 2023.
Tested by: InterCAD
File name: dynam1.axs

Thema	Deep simply supported beam.
Analysis Type	Vibration analysis.
Geometry	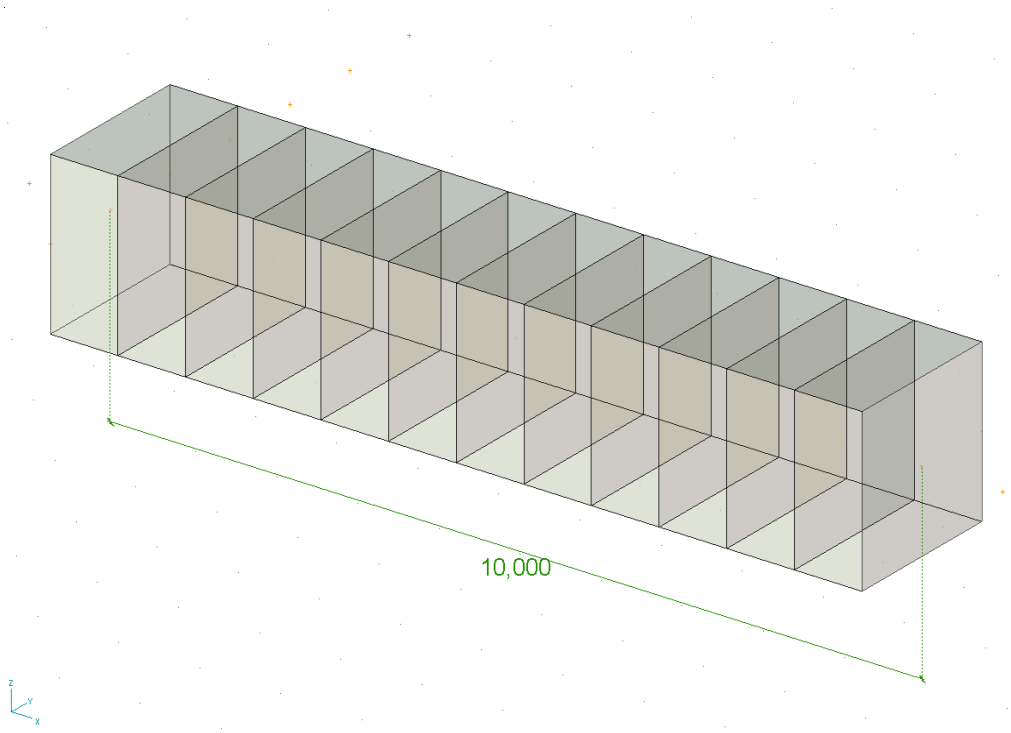 Beam (Axonometric view) Cross section (square 2,0 m x 2,0 m)
Loads	Self-weight (Other option: Apply *Masses only* option on Vibration analysis window)
Boundary Conditions	eX = eY = eZ = fiX = 0 at A eY = eZ = 0 at B
Material Properties	E = 20000 kN / cm^2 ν = 0,3 ρ = 8000 kg / m^3
Element types	Rib element: Three node beam element (shear deformation is taken into account)
Target	First 7 mode shapes

Results

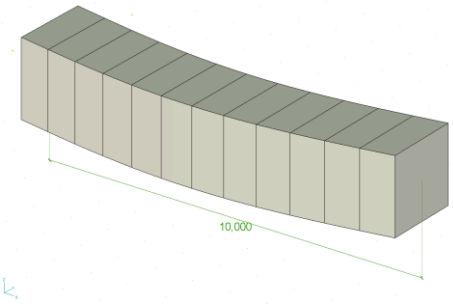

Mode 1: f = 43,16 Hz

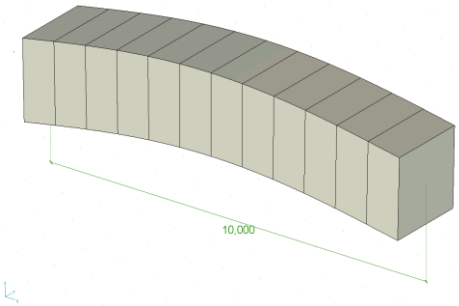

Mode 2: f = 43,16 Hz

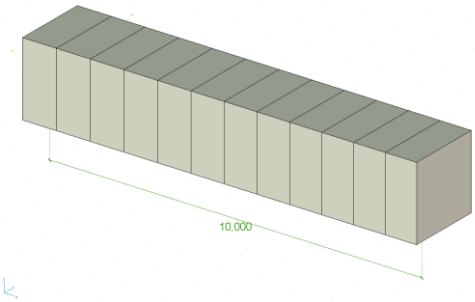

Mode 3: f = 124,01 Hz

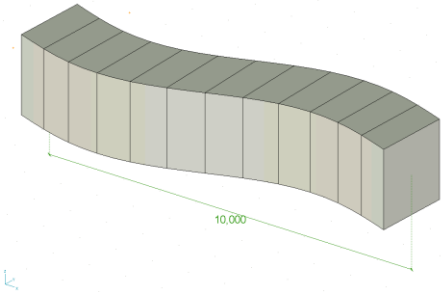

Mode 4: f = 152,50 Hz

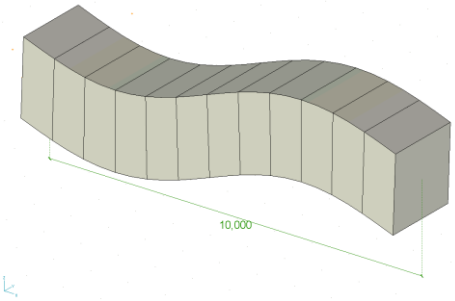

Mode 5: f = 152,50 Hz

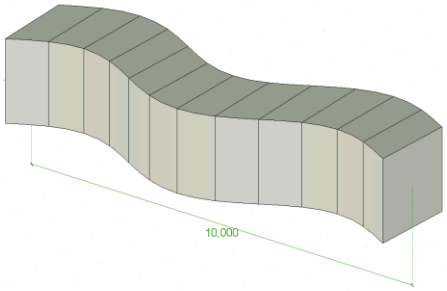

Mode 6: f = 293,55 Hz

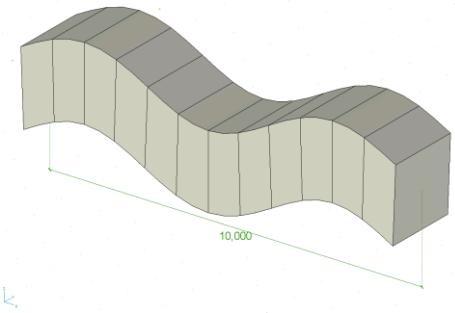

Mode 7: f = 293,55 Hz

Results	Comparison with NAFEMS example

Mode	NAFEMS (Hz)	AxisVM (Hz)	%
1	42,65	43,16	-1,20
2	42,65	43,16	-1,20
3	125,00	124,01	0,79
4	148,31	152,50	-2,83
5	148,31	152,50	-2,83
6	284,55	293,55	-3,16
7	284,55	293,55	-3,16

Software Release Number: X7r1a
Date: 06. 02. 2023.
Tested by: InterCAD
File name: dynam2.axs

Thema	Clamped thin rhombic plate.
Analysis Type	Vibration analysis.
Geometry	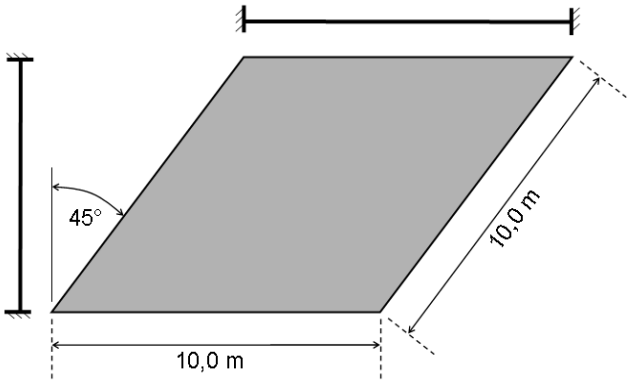 Top view of plane (thickness = 5,0 cm)
Loads	Self-weight
Boundary Conditions	eX = eY = fiZ = 0 at all nodes (i.e.: eX, eY, fiZ constrained at all nodes; Nodal DOF: Plate in X-Y plane) eZ = fiX = fiY = 0 along the 4 edges (Line support)
Material Properties	E = 20000 kN / cm^2 ν = 0,3 ρ = 8000 kg / m^3
Element types	Parabolic quadrilateral shell element (heterosis type)
Mesh	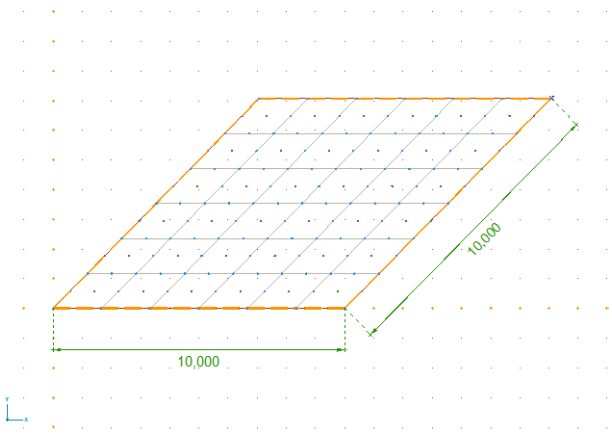

Target	First 6 mode shapes
Results	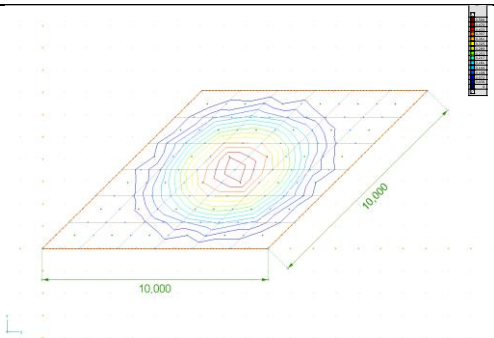 Mode 1: f = 8,02 Hz 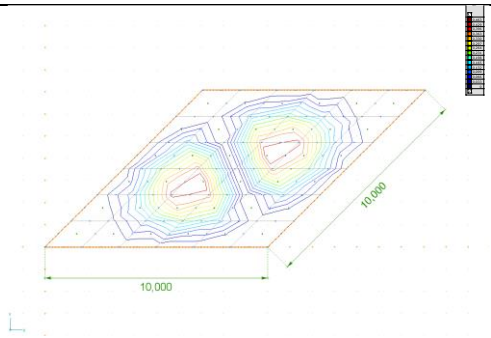 Mode 2: f = 13,02 Hz 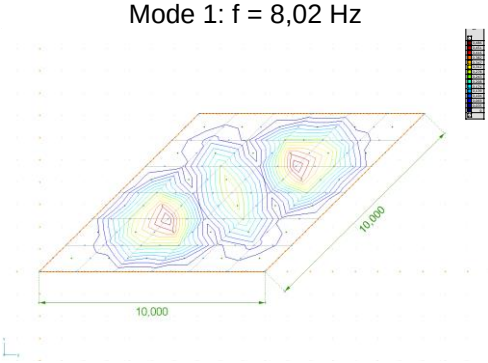 Mode 3: f = 18,41 Hz 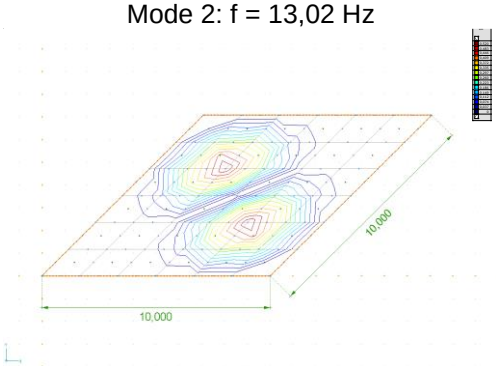 Mode 4: f = 19,33 Hz 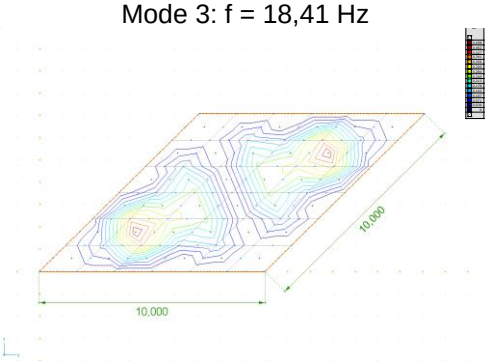 Mode 5: f = 24,62 Hz 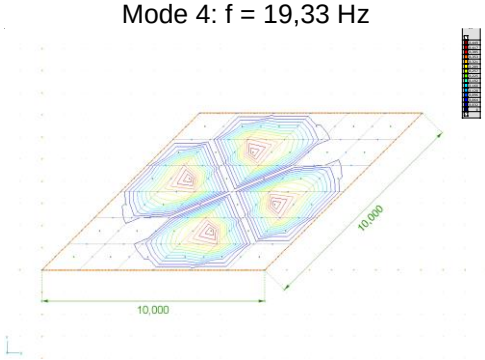 Mode 6: f = 28,24 Hz
Results	Comparison with NAFEMS example

Mode	NAFEMS (Hz)	AxisVM (Hz)	%
1	7,94	8,02	1,01
2	12,84	13,02	1,40
3	17,94	18,41	2,62
4	19,13	19,33	1,05
5	24,01	24,62	2,54
6	27,92	28,24	1,15

Software Release Number: X7r1a
Date: 06. 02. 2023.
Tested by: InterCAD
File name: dynam3.axs

Thema	Cantilevered thin square plate.
Analysis Type	Vibration analysis.
Geometry	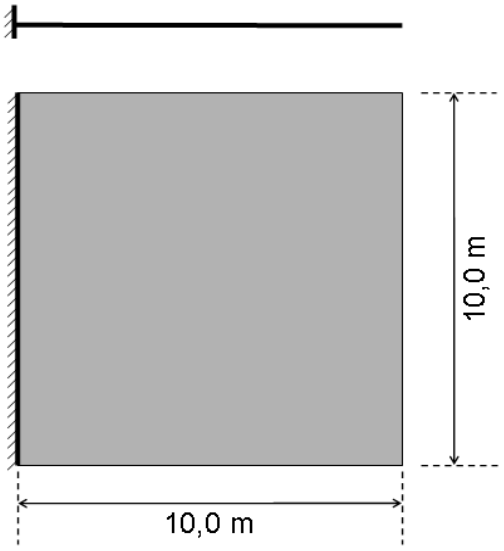 Top view (thickness = 5,0 cm)
Loads	Self-weight
Boundary Conditions	eX = eY = eZ = fiX = fiY = fiZ = 0 along y-axis
Material Properties	E = 20000 kN / cm^2 ν = 0,3 ρ = 8000 kg / m^3
Element types	Parabolic quadrilateral shell element (heterosis type).
Mesh	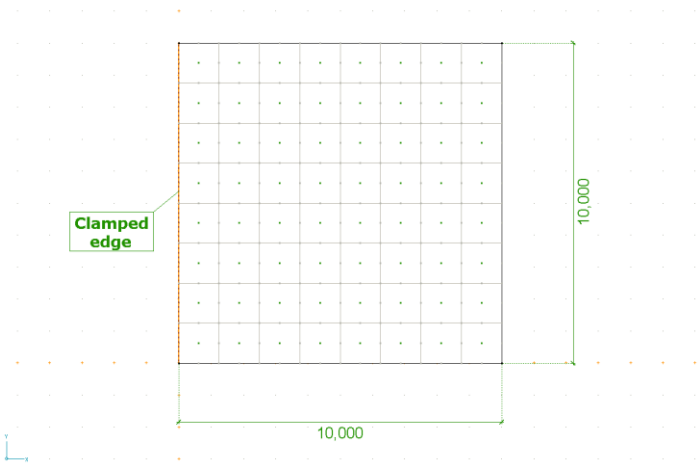

Target	First 5 mode shapes
Results	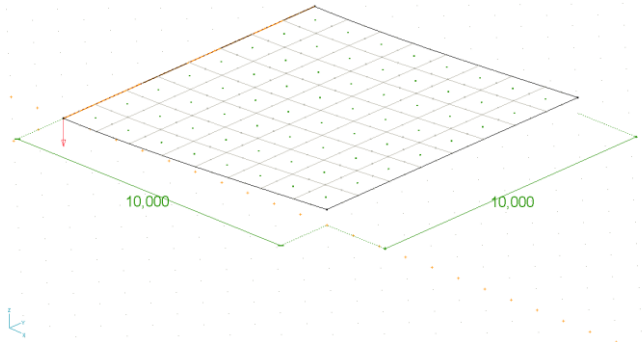 Mode 1: f = 0,42 Hz 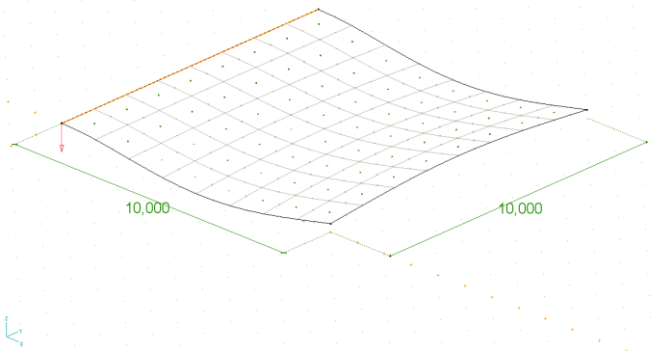 Mode 3: f = 2,53 Hz 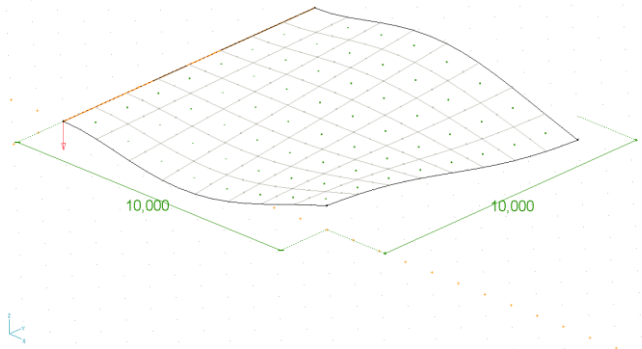 Mode 5: f = 3,68 Hz

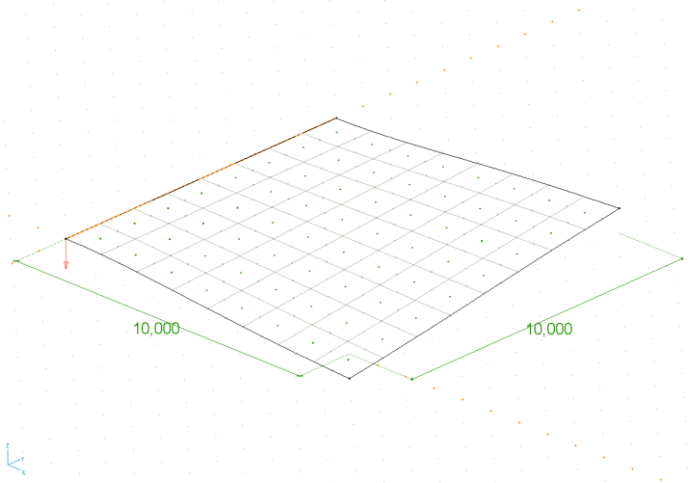

Mode 2: f = 1,02 Hz

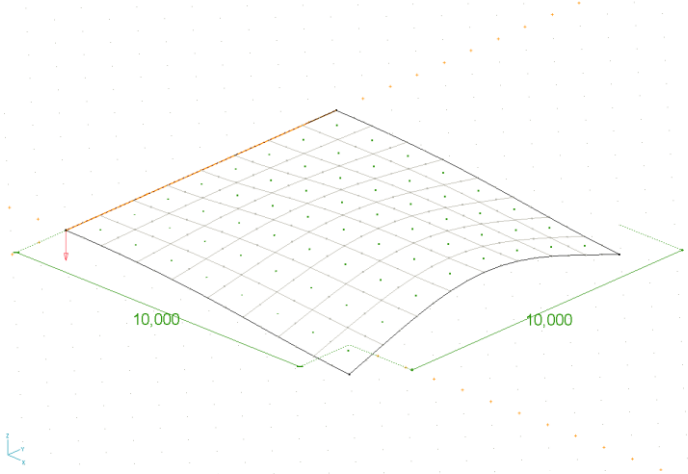

Mode 4: f = 3,22 Hz

Comparison with NAFEMS example

Mode	NAFEMS (Hz)	AxisVM (Hz)	%
1	0,421	0,420	-0,24
2	1,029	1,020	-0,87
3	2,580	2,530	-1,94
4	3,310	3,220	-2,72
5	3,750	3,680	-1,87

Software Release Number: X7r1a
Date: 06. 02. 2023.
Tested by: InterCAD
File name: dynam4.axs

Thema	Cantilevered tapered membrane.
Analysis Type	Vibration analysis.
Geometry	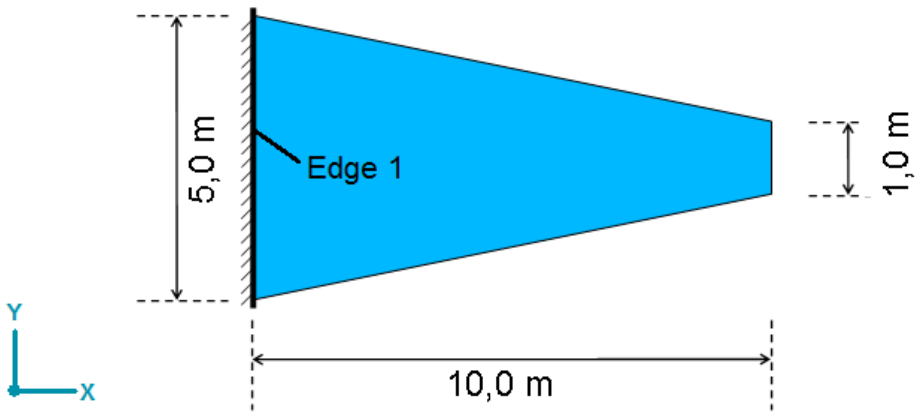 Side view (thickness = 10,0 cm)
Loads	Self-weight
Boundary Conditions	Edge 1: Nodal DOF: Fixed node Other nodes: DOF: (f f C C C C) (f: free; C: constrained)
Material Properties	E = 20000 kN / cm^2 ν = 0,3 ρ = 8000 kg / m^3
Element types	Parabolic quadrilateral membrane (plane stress)
Mesh	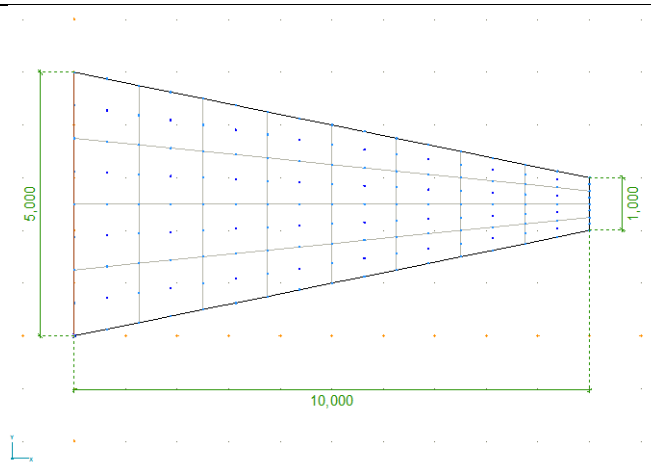

Target	First 4 mode shapes
Results	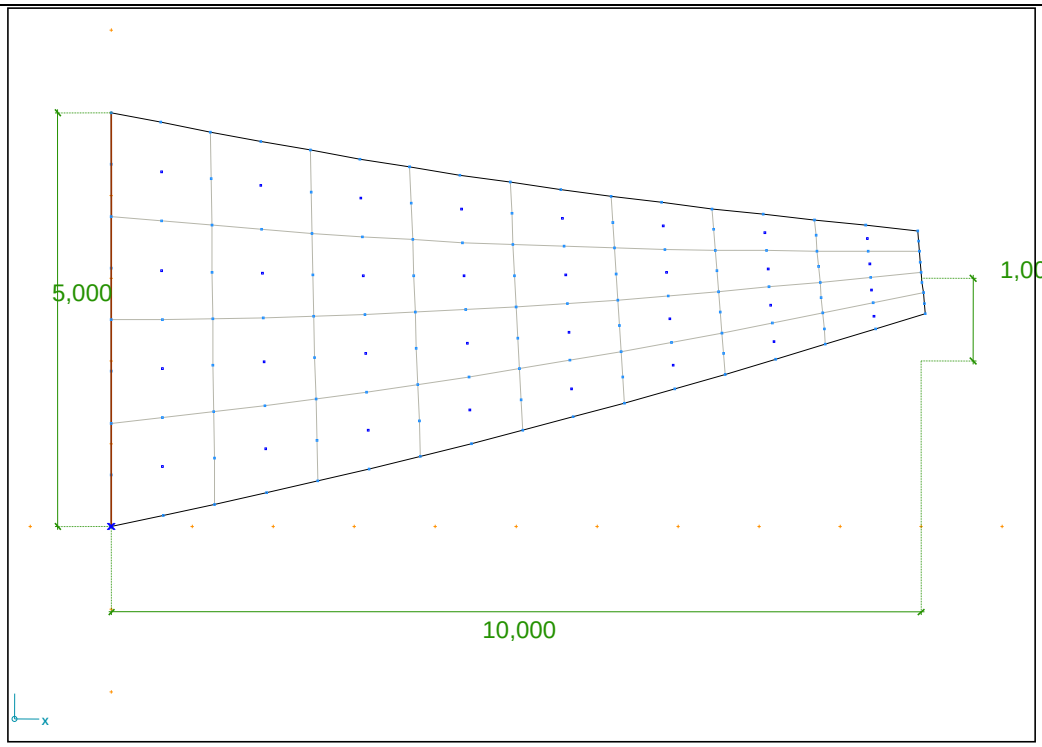 Mode 1: f = 44,50 Hz 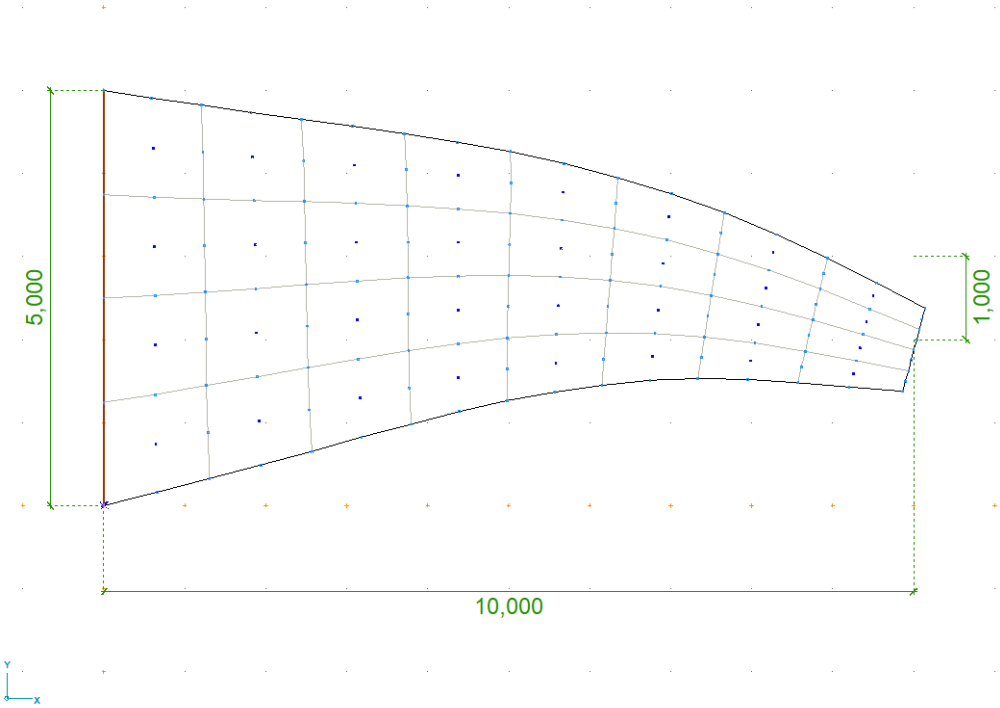 Mode 2: f = 128,60 Hz

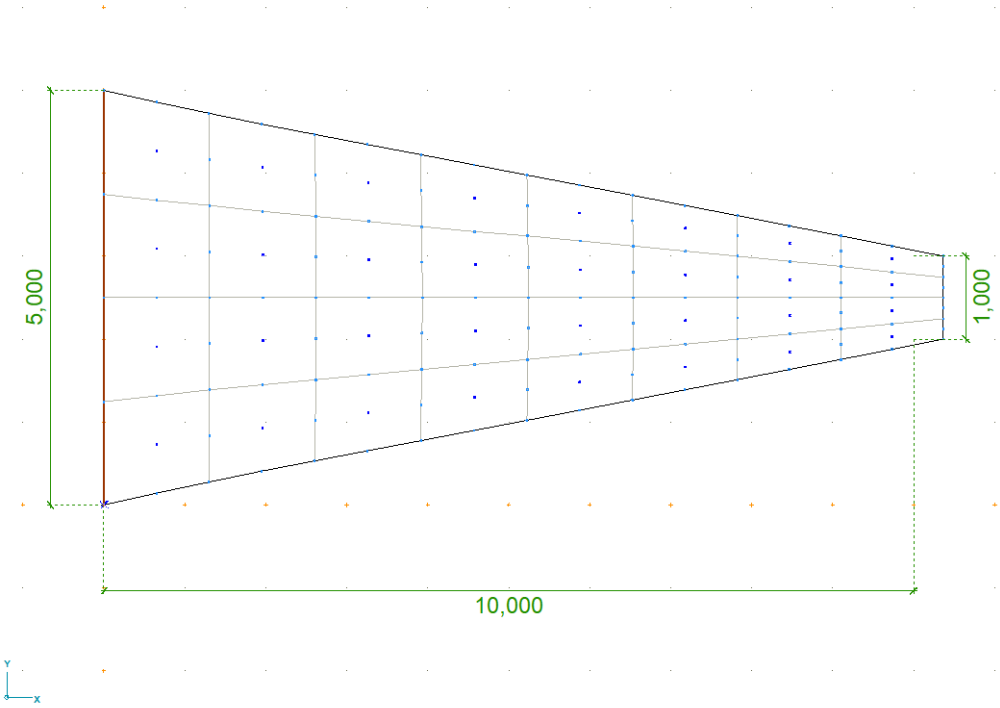

Mode 3: f = 162,48 Hz

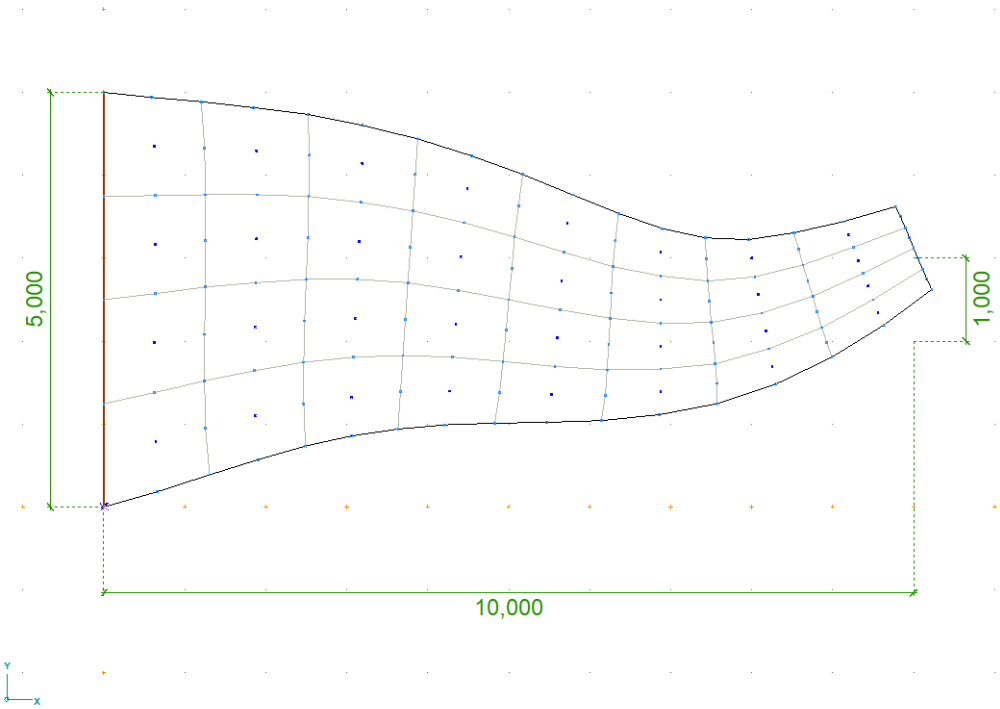

Mode 4: f = 241,46 Hz

Results

Comparison with NAFEMS example

Mode	NAFEMS (Hz)	AxisVM (Hz)	%
1	44,62	44,50	-0,27
2	130,03	128,60	-1,10
3	162,70	162,48	-0,14
4	246,05	241,46	-1,87

Software Release Number: R3
Software Release Number: X4r1

Software Release Number: X7r1a
Date: 06. 02. 2023.
Tested by: InterCAD
File name: dynam5.axs

Thema	Flat grillages.
Analysis Type	Vibration analysis.
Geometry	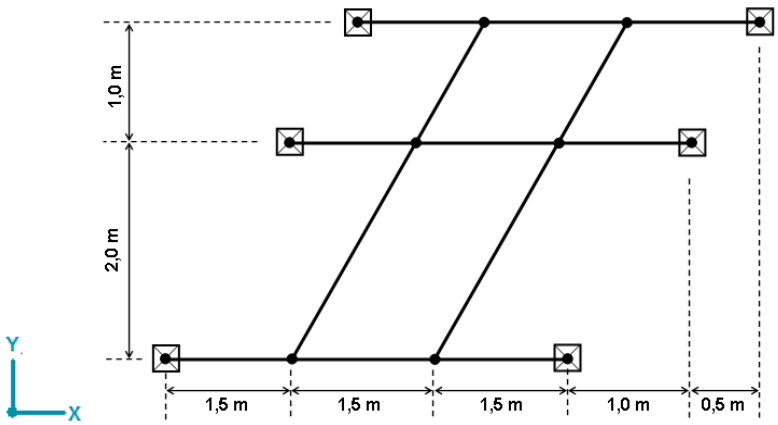 Top view
Loads	Self-weight
Boundary Conditions	eX = eY = eZ = 0 at the ends (simple supported beams) Nodal DOF: Grillage in X-Y plane
Material Properties	E = 20000 kN / cm^2 G = 7690 kN / cm^2 ν = 0,3 ρ = 7860 kg / m^3
Cross Section	A = 0,004 m^2 Ix = 2,5E-5 m^4 Iy = Iz = 1,25E-5 m^4
Element types	Rib element: Three node beam element (shear deformation is taken into account)
Mesh	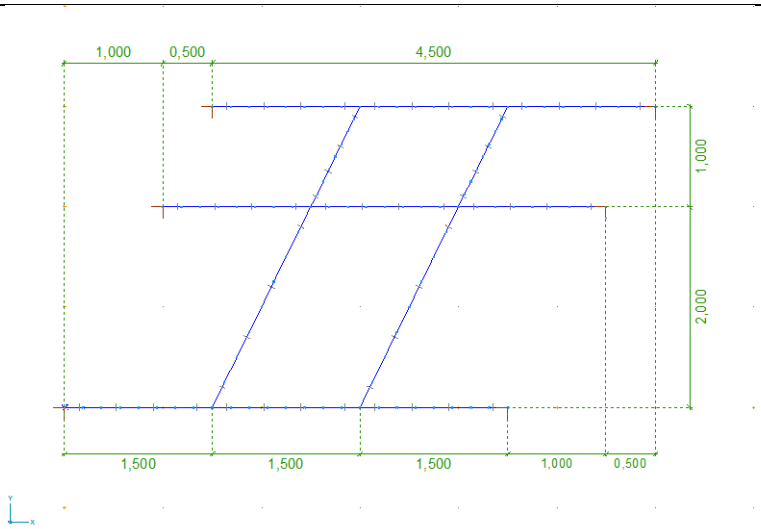

Target	First 3 mode shapes
Results	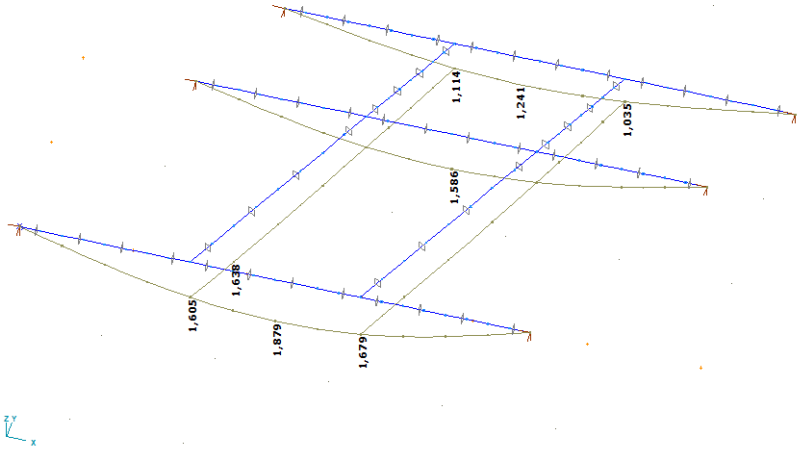 Mode 1: f = 16,90 Hz 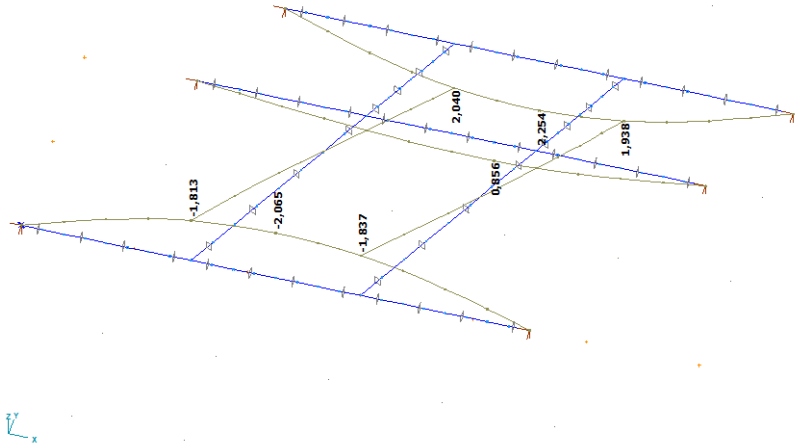 Mode 2: f = 20,64 Hz 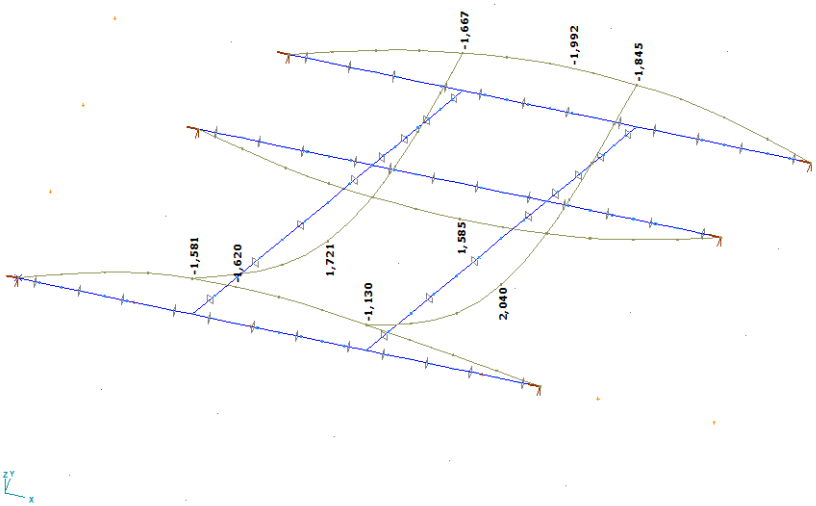 Mode 3: f = 51,76 Hz

Mode	Reference	AxisVM (Hz)	%
1	16,85	16,90	0,30
2	20,21	20,64	2,13
3	53,30	51,76	-2,89

Reference:

C.T.F. ROSS: Finite Element Methods In Engineering Science

BLANK

Stability

Software Release Number: X7r1a
Date: 06. 02. 2023.
Tested by: InterCAD
File name: buckling1.axs

Thema	Simply supported beam (1st sample)
Analysis Type	Buckling analysis.
Geometry	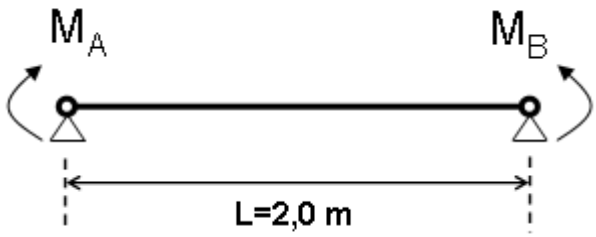 Front view 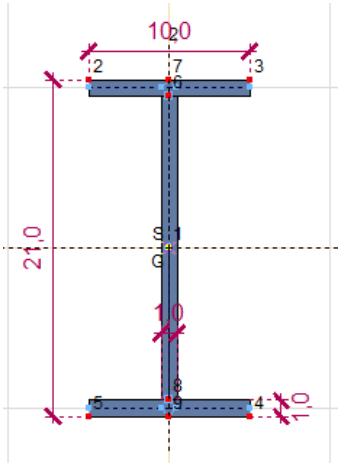 Cross section(I_z =168,3 cm^4, I_t =12,18 cm^4, I_w =16667 cm^6)
Loads	Bending moment at both ends of beam M_A = 1,0 kNm, M_B = -1,0 kNm (Moments are applied as surface edge loads)
Boundary Conditions	eX = eY = eZ = 0 at A eX = eY = eZ = 0 at B $k_z = k_w = 1$
Material Properties	E = 20600 kN / cm^2 ν = 0,3
Element types	Parabolic quadrilateral shell element (heterosis type)
Mesh	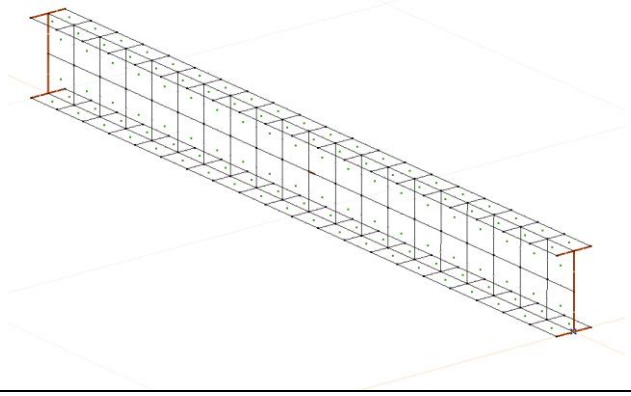

Target	M_{cr} = ? (for lateral torsional buckling)
Results	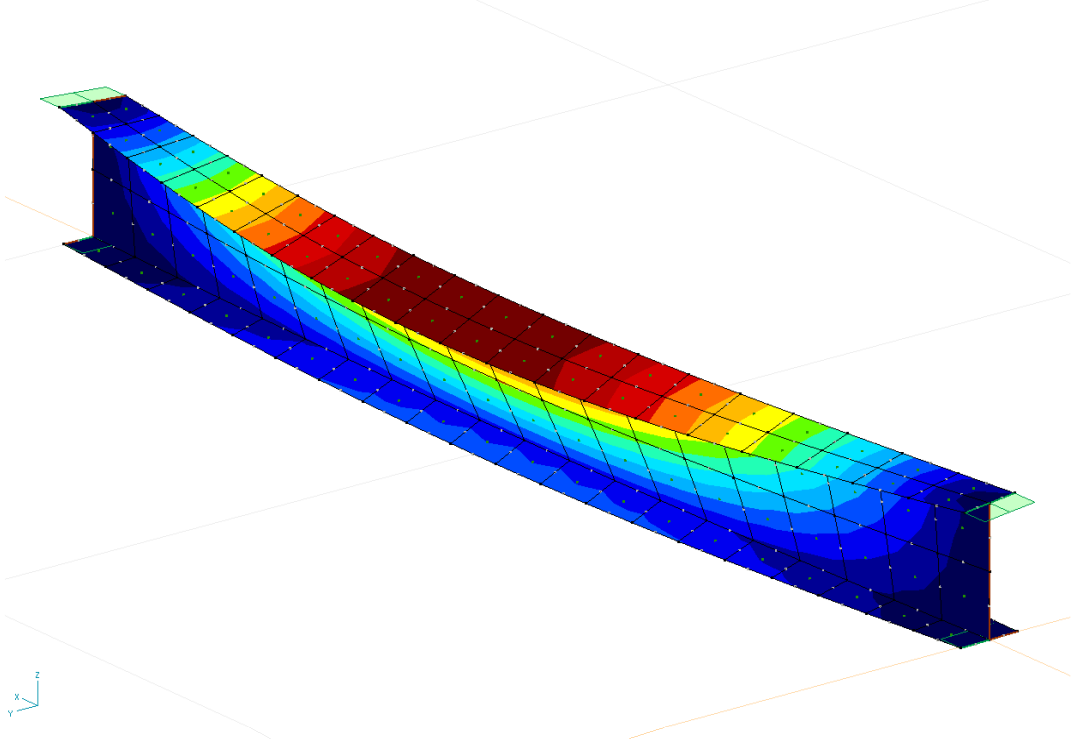 Analytical solution $$M_{cr} = \frac{\pi^2 \cdot E \cdot I_Z}{L^2}\sqrt{\frac{I_W}{I_Z} + \frac{L^2 \cdot G \cdot I_t}{\pi^2 \cdot E \cdot I_Z}}$$ $$M_{cr} = \frac{\pi^2 \cdot 20600 \cdot 168{,}3}{200^2}\sqrt{\frac{16667}{168{,}3} + \frac{200^2 \cdot 7923 \cdot 12{,}18}{\pi^2 \cdot 20600 \cdot 168{,}3}} = 12451 \;\; kNcm = 124{,}51 \;\; kNm$$ AxisVM result M_{cr} = 125,3 kNm Difference +0,6%

Software Release Number: X7r1a
Date: 06. 02. 2023.
Tested by: InterCAD
File name: buckling2.axs

Thema	Simply supported beam (2nd sample)
Analysis Type	Buckling analysis.
Geometry	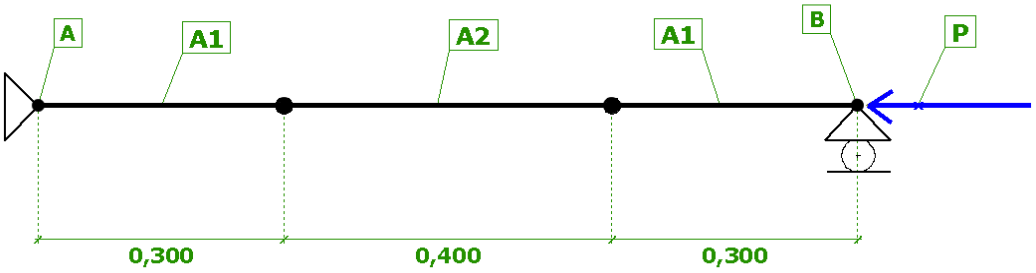 Front view (L = 1,0 m) 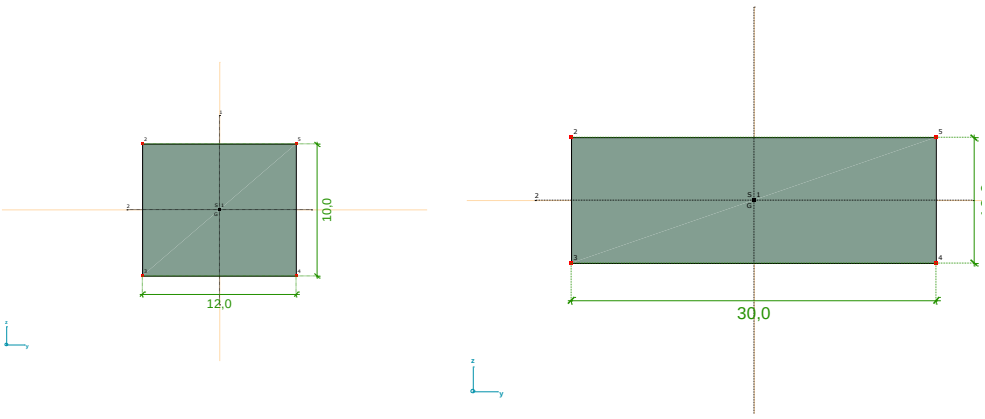 Section A_1 Section A_2 Cross-sections
Loads	P = -1,0 kN at point B.
Boundary Conditions	eX = eY = eZ = 0 at A eY = eZ = 0 at B
Material Properties	E = 20000 kN / cm^2 ν = 0,3
Element types	Beam element
Target	P_{cr} = ? (for inplane buckling)
Results	

	Theory	AxisVM	e [%]
P_{cr} [kN]	3,340	3,337	-0,09

Software Release Number: X7r1a
Date: 06. 02. 2023.
Tested by: InterCAD
File name: buckling3.axs

Thema	Simply supported beam with monosymmetric cross-section (7 DOF beam)
Analysis Type	Buckling analysis.
Geometry	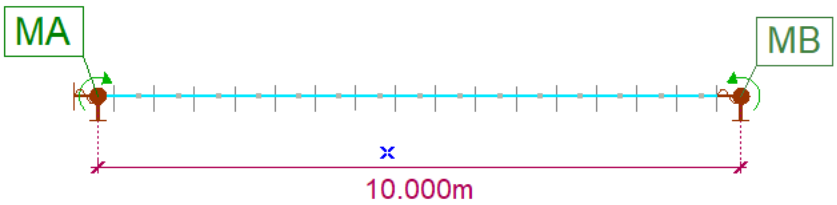 Front view 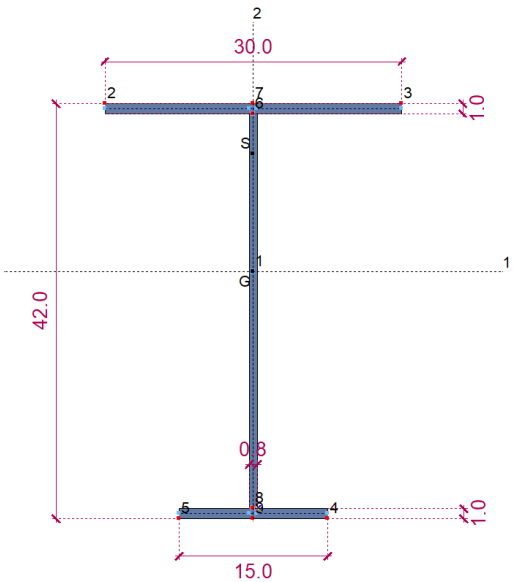 Cross section (I_z =2533 cm^4, I_t =21,8 cm^4, I_w =420623 cm^6, β_y=-28,8 cm)
Loads	Bending moment at both ends of beam M_A = 1,0 kNm, M_B = 1,0 kNm
Boundary Conditions	eX = eY = eZ = φX = φY = φZ = 0 at A eX = eY = eZ = φX = φY = φZ = 0 at B $k_z = k_w = 1$
Material Properties	E = 21000 kN / cm^2 ν = 0,0
Element types	14 DOF warping beam element.
Target	M_{cr} = ? (for lateral torsional buckling)

Results	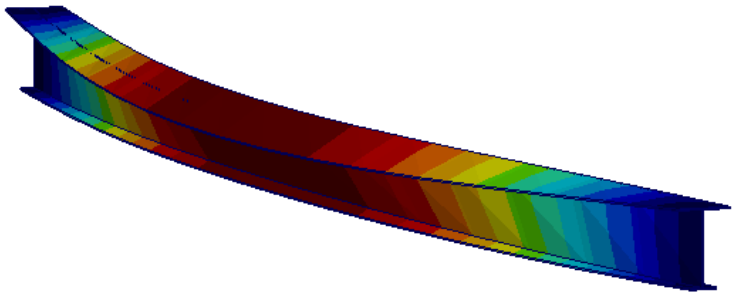 Analytical solution: $M_{cr} = C_1 \frac{\pi^2 E I_z}{(kL)^2}\left(\sqrt{\left(\frac{k}{k_w}\right)^2 \frac{I_w}{I_z} + \frac{(kL)^2 G I_t}{\pi^2 E I_Z} + \left(C_2 z_g - C_3 z_j\right)^2} - \left(C_2 z_g - C_3 z_j\right)\right) = 215.37\ \mathrm{kNm},$ where $C_1 = 1.0$, $C_2 = 0.0$, $C_3 = 1.0$, $k = 1$, $k_w = 1$, $z_j = -0.5\beta_y = 14.4$ cm, $z_g = 0$ cm. AxisVM result: $M_{cr,FEM} = 215.42\mathrm{kNm}$ Difference: Δ=0.02%

Software Release Number: X7r1a
Date: 06. 02. 2023.
Tested by: InterCAD
File name: buckling4.axs

Thema	Simply supported beam with monosymmetric cross-section (7 DOF beam)
Analysis Type	Buckling analysis.
Geometry	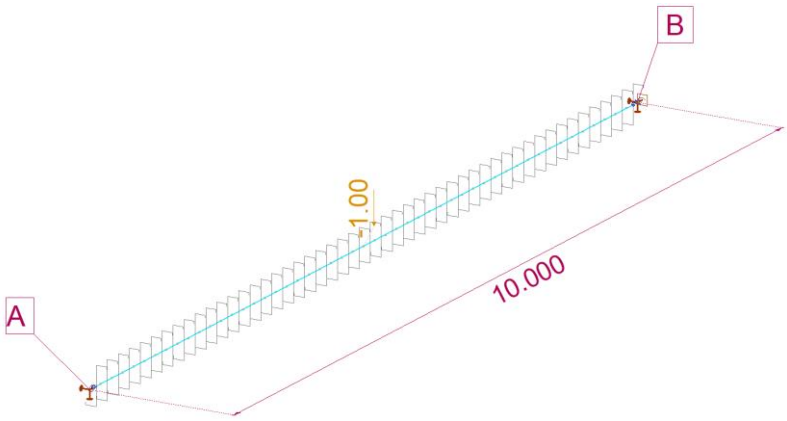 Axonometric view of beam element with eccentric load

<table>
<tr><td></td><td>
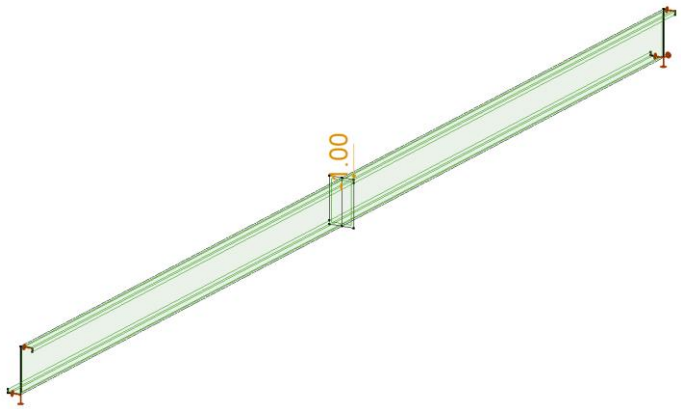

Axonometric view of shell element with eccentric load

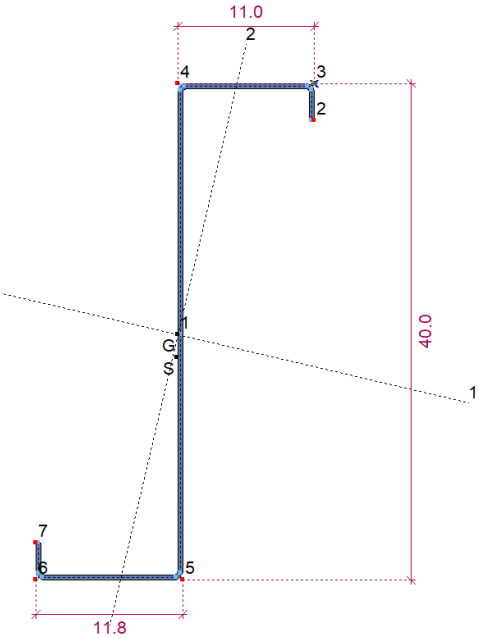

Cross section SWEDSTEEL Z400X4
</td></tr>
<tr><td>Loads</td><td>Eccentric load at midspan
F = 1,0 kN</td></tr>
<tr><td>Boundary Conditions</td><td>eY = eZ = φX = w = 0 at A
eX = eY = eZ = φX = w = 0 at B (restrained warping at both ends)</td></tr>
<tr><td>Material Properties</td><td>E = 21000 kN / cm^2
ν = 0,0</td></tr>
<tr><td>Element types</td><td>14 DOF warping beam element.</td></tr>
<tr><td>Target</td><td>M_{cr} = ? (for lateral torsional buckling)</td></tr>
<tr><td>Results</td><td>

$$M_{cr,SHELL} = 13.772 \text{ kN}$$

$$M_{cr,BEAM} = 12.962 \text{ kN}$$

Difference:

Δ=6%
</td></tr>
</table>

Software Release Number: X7r1a
Date: 06. 02. 2023.
Tested by: InterCAD
File name: Platebuckling_aperb2.axs

Thema	Plate buckling simply supported rectangular plate
Analysis Type	Buckling analysis of plate
Geometry	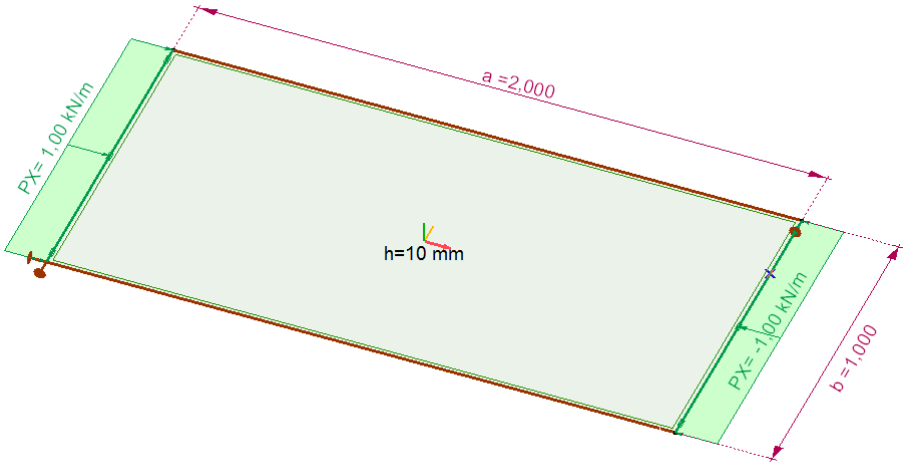
Loads	Distributed compression load at the x=0 and x=a edges x=0 and x=a Px= 1,0 kN/m
Boundary Conditions	Line supports: Kx=Ky=-Kxx=Kyy=Kzz=0 at x=0;x=a Kx=Ky=-Kxx=Kyy=Kzz=0 at y=0;y=b Additional nodal supports to prevent rigid body motion, but allow transverse contraction: eZ= φX=φY=φZ=0 at x,y=(0,0) eX=eZ= φX=φY=φZ=0 at x,y=(a,b)
Material Properties	E = 21000 kN / cm^2 ν = 0,0
Element types	shell elements
Mesh	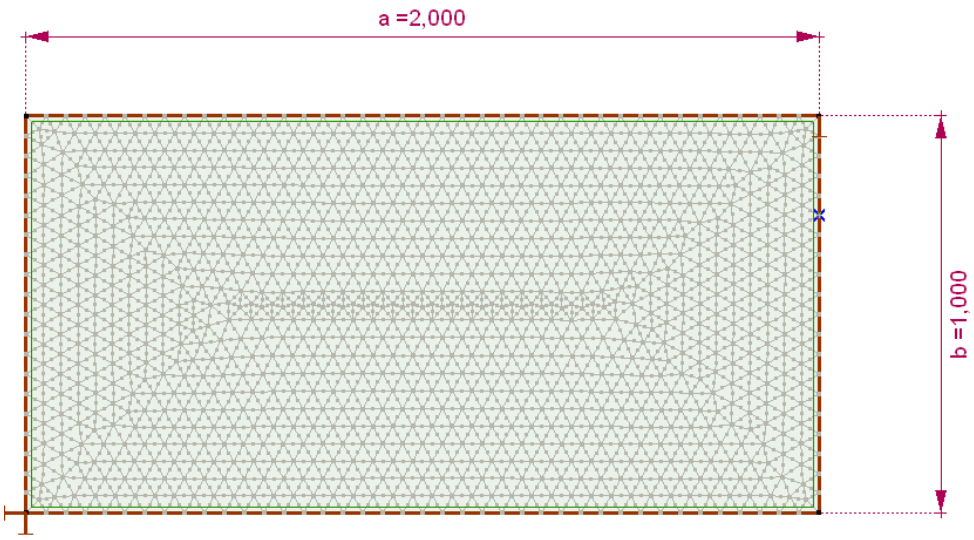
Target	Comparison of critical buckling stress of AxisVM calculation with the analytical solution

Results:

1st Mode – m=2, n=1

AxisvM restult

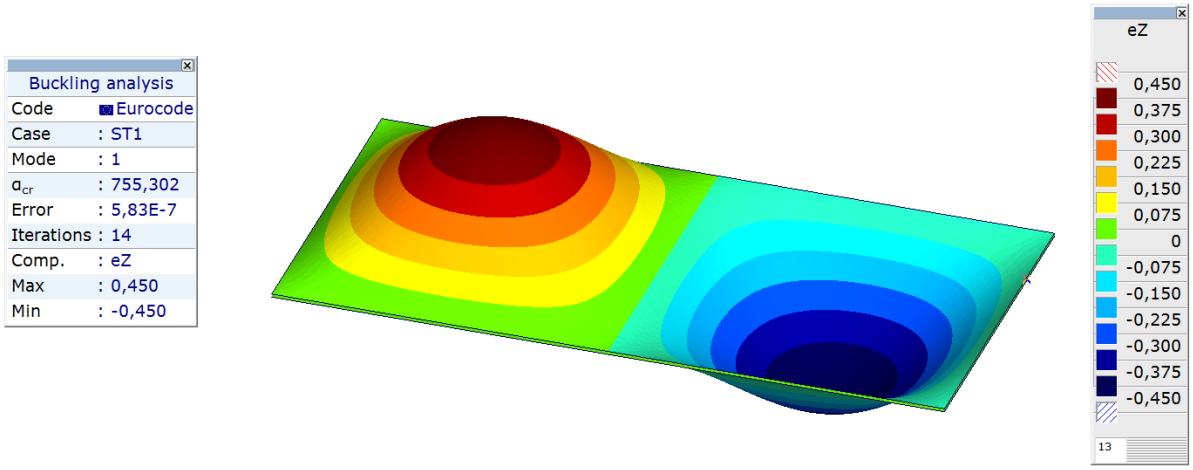

E=	210000	N/mm2
t=	10	mm
a=	2000	mm
b=	1000	mm
ν=	0,3	

Analitycal Solution		AxisVM result		Difference
m	2	αcr	755,302	Analytical/ AxisVM
n	1	$N_{applied\ [kN/m]}$	1	
k	4			[%]
σ_{cr} [N/mm^2]	**75,92**	σ_{cr} [N/mm^2]	**75,5302**	-0,516%

Software Release Number: X7r1a
Date: 06. 02. 2023.
Tested by: InterCAD
File name: Buckling_beam_7dof_v0.axs; Buckling_beam_shell_v0.axs

Thema	Verification of Euler Buckling shapes (Beam buckling)
Analysis Type	Buckling
Geometry	Version A.) Beam model (7DOF) 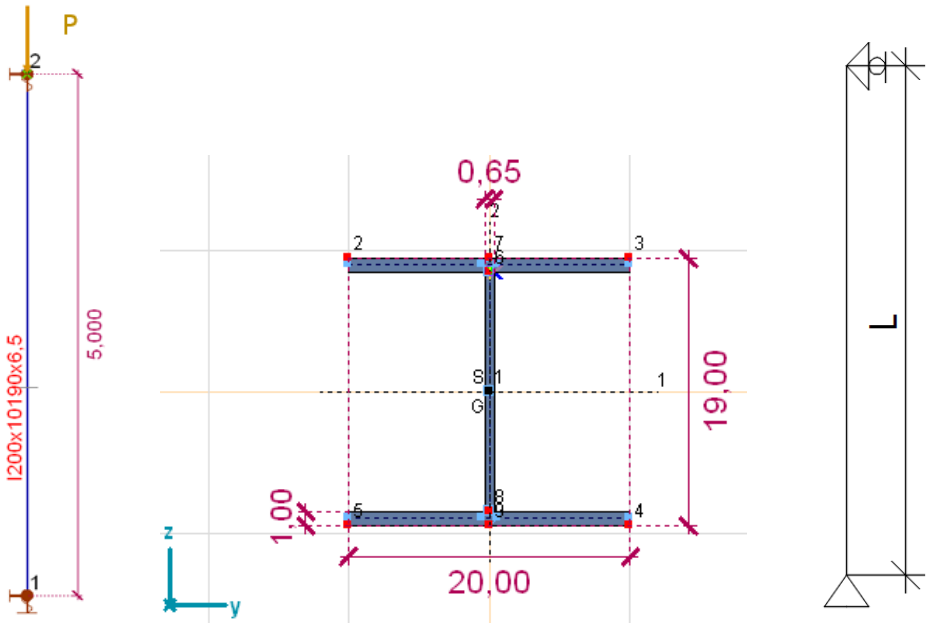 Cross section (I_Z= 1333,7 cm^4, I_Y= 3509,5 cm^4) Version B.) Shell elements 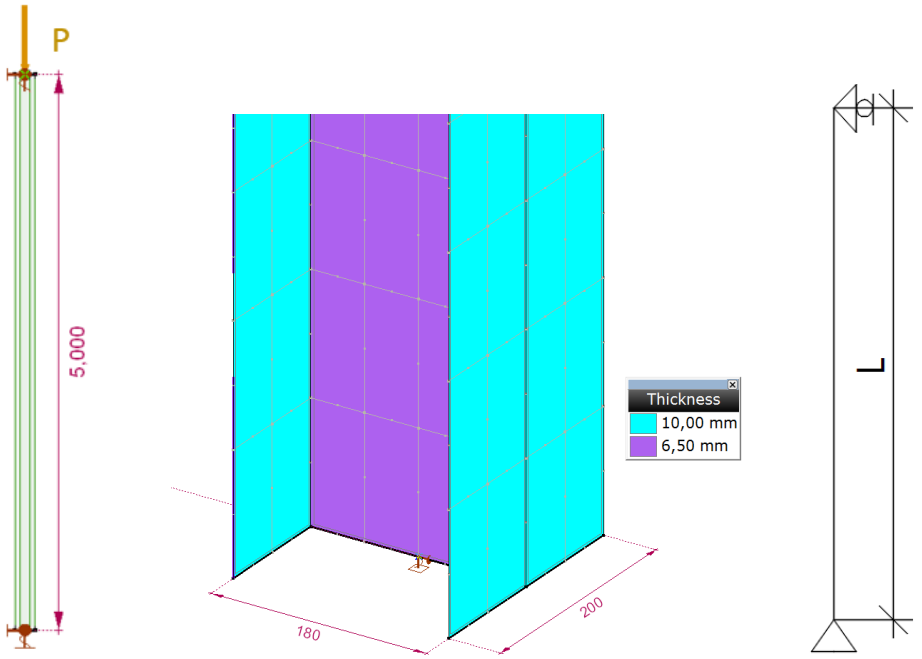
Loads	P=-10kN at node 2
Boundary Conditions	φX=φY =0 at node 1 eZ=φX=φY =0 at node 2

Material Properties	E=21000 kN / cm^2 ν=0,3
Element types	Version A.) beam element (7DOF) Version B.) shell elements
Target	Comparison of buckling shapes in case of beam model and the alternative shell model (for in-plane buckling) with the analytical solution

Analytical solution of column deflection:
[1]

$$w(x) = A \sin(kx),$$
$$k = \frac{n\pi}{l} \text{ with } n \in \mathbb{N}.$$

Results:	

Buckling around weak axis (1st Mode – n=1)

Beam-model (7DOF)	Shell-model

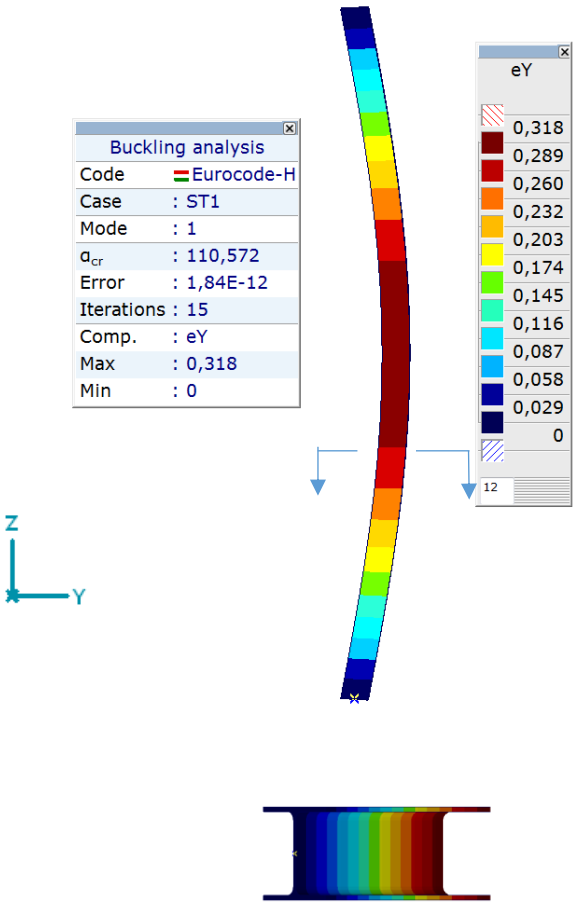

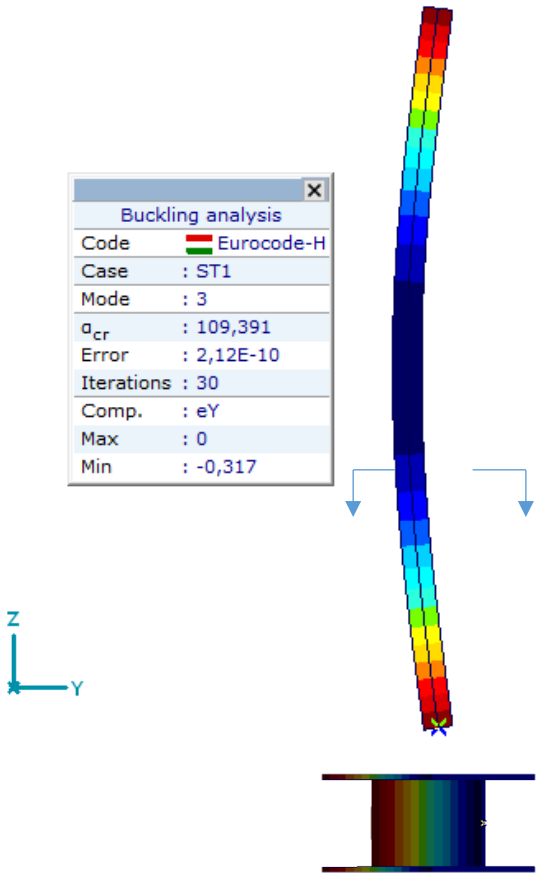

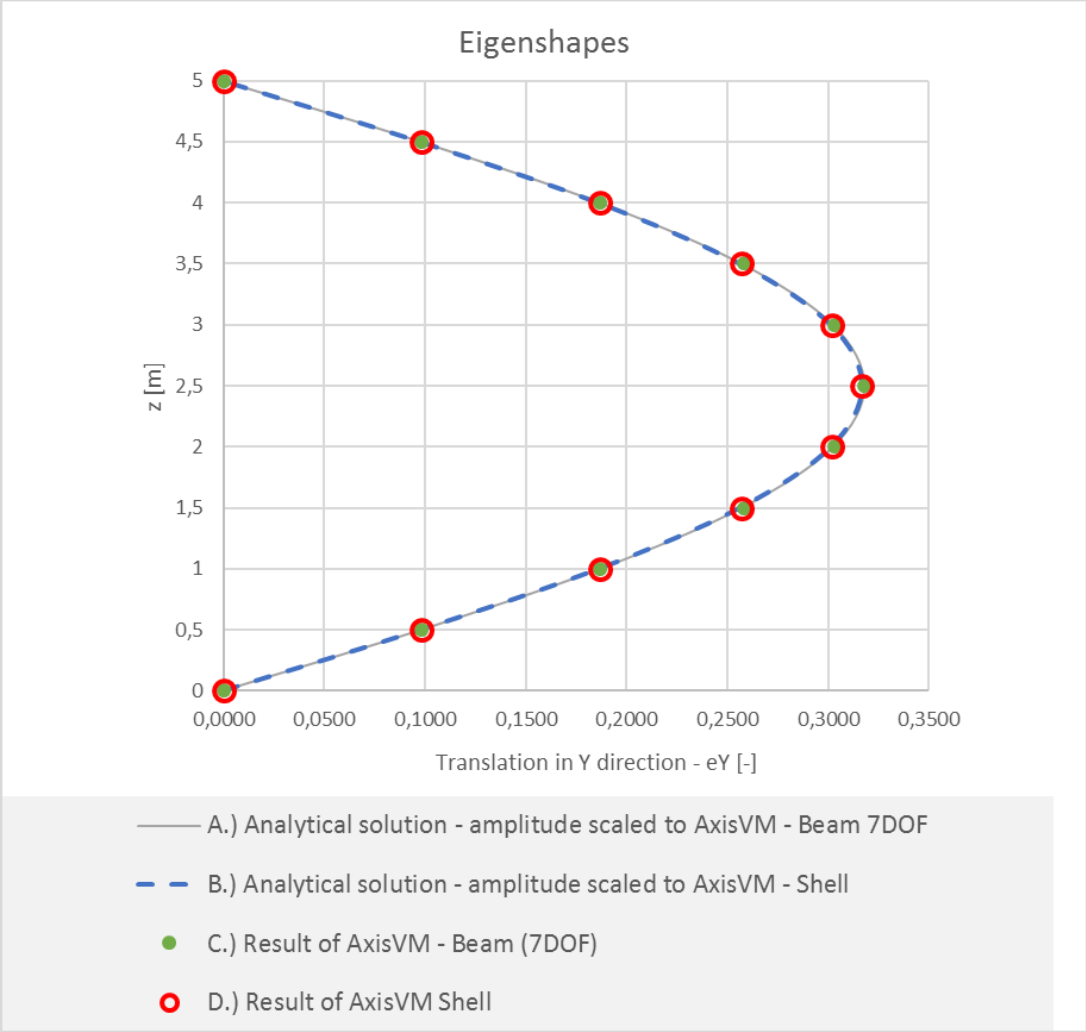

Mode 1 - Buckling around weak axis n=1						
Coordinate in z-direction	Analytical solution		Results of AxisVM		Difference A./C.	Difference B./D.
	A.)	B.)	C.)	D.)		
	max. amplitude scaled to AxisVM (Beam) Asin(nπz/L) with n=1; A=0,318	max. amplitude scaled to AxisVM (Shell) Asin(nπz/L) with n=1; A=0,317	Beam (7DOF)	Shell Investigated in the neutral axis		
z	eY	eY	eY	eY	[%]	[%]
[m]	[-]	[-]	[-]	[-]		
0	0,0000	0,0000	0,0000	0,000	0,000	0,000
0,5	0,0983	0,0980	0,0980	0,098	-0,273	0,042
1	0,1869	0,1863	0,1870	0,187	0,045	0,359
1,5	0,2573	0,2565	0,2580	0,257	0,284	0,211
2	0,3024	0,3015	0,3030	0,302	0,186	0,171
2,5	0,3180	0,3170	**0,3180**	**0,3170**	0,000	0,000
3	0,3024	0,3015	0,3030	0,302	0,186	0,171
3,5	0,2573	0,2565	0,2580	0,257	0,284	0,211
4	0,1869	0,1863	0,1870	0,187	0,045	0,359
4,5	0,0983	0,0980	0,0980	0,098	-0,273	0,042
5	0,0000	0,0000	0,0000	0,000	0,000	0,000

Buckling around weak axis (n=2)

Beam-model (7DOF)	Shell-model
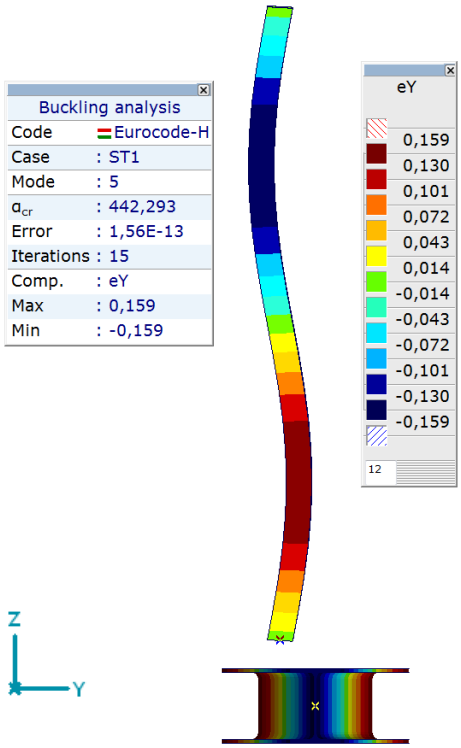	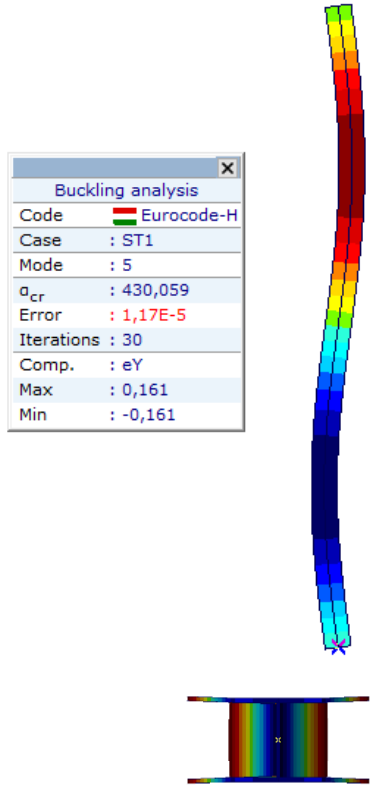

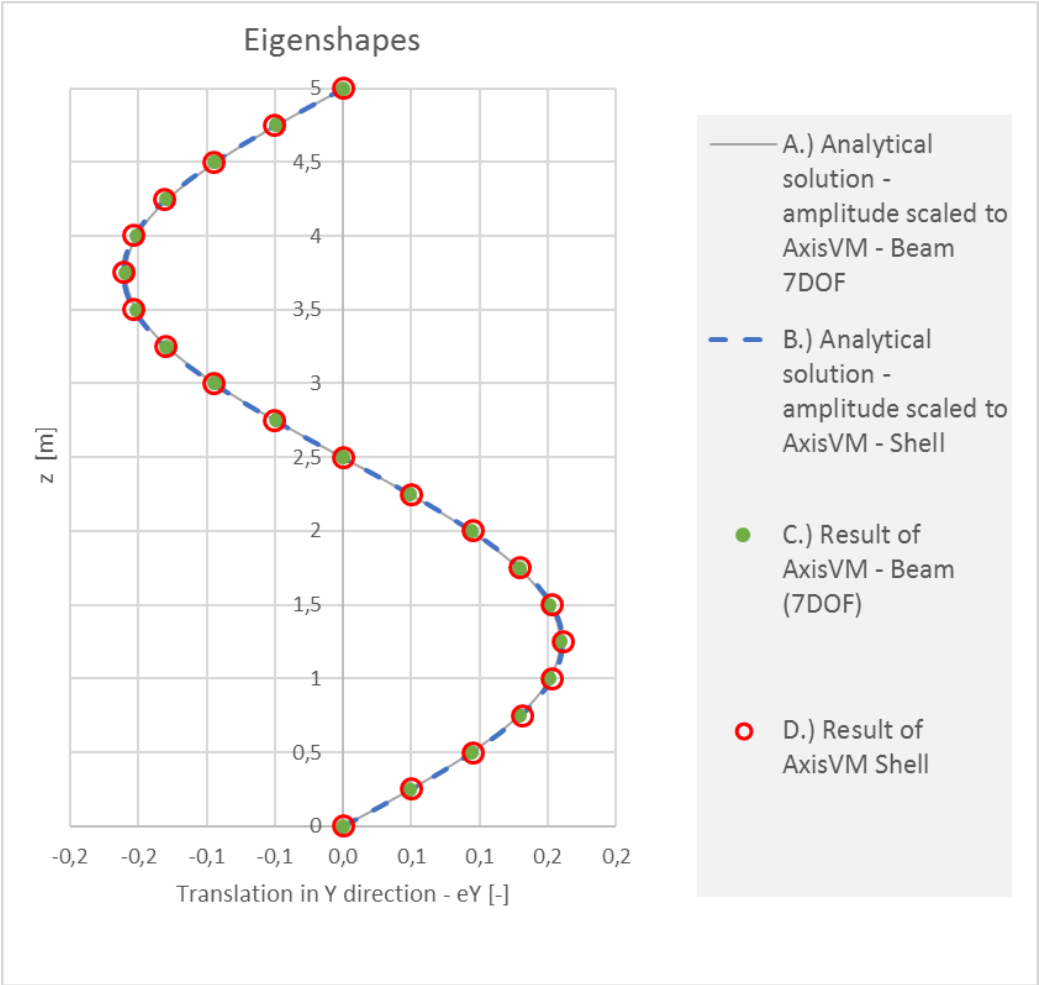

Mode 3 - Buckling around weak axis n=2						
Coordinate in z-direction	Analytical solution		Results of AxisVM		Difference A./C.	Difference B./D.
	A.)	B.)	C.)	D.)		
	max amplitude scaled to AxisVM (Beam) Asin(nπz/L) with n=1; A=0,159	max amplitude scaled to AxisVM (Shell) Asin(nπz/L) with n=1; A=0,161	Beam (7DOF)	Shell Investigated in the neutral axis		
z	eY	eY	eY	eY	[%]	[%]
[m]	[-]	[-]	[-]	[-]		
0	0,00	0,00	0,000	0,000	0,000	0,000
0,25	0,05	0,05	0,049	0,05	-0,273	0,497
0,5	0,09	0,09	0,094	0,095	0,577	0,386
0,75	0,13	0,13	0,129	0,131	0,284	0,571
1	0,15	0,15	0,151	0,153	-0,144	-0,078
1,25	0,16	0,16	**0,159**	**0,161**	0,000	0,000
1,5	0,15	0,15	0,151	0,153	-0,144	-0,078
1,75	0,13	0,13	0,129	0,13	0,284	-0,194
2	0,09	0,09	0,094	0,095	0,577	0,386
2,25	0,05	0,05	0,049	0,05	-0,273	0,497
2,5	0,00	0,00	0,000	0,000	0,000	0,000
2,75	-0,05	-0,05	-0,049	-0,05	-0,273	0,497
3	-0,09	-0,09	-0,094	-0,095	0,577	0,386
3,25	-0,13	-0,13	-0,129	-0,13	0,284	-0,194
3,5	-0,15	-0,15	-0,151	-0,153	-0,144	-0,078
3,75	-0,16	-0,16	**-0,159**	**-0,161**	0,000	0,000
4	-0,15	-0,15	-0,151	-0,153	-0,144	-0,078
4,25	-0,13	-0,13	-0,129	-0,131	0,284	0,571
4,5	-0,09	-0,09	-0,094	-0,095	0,577	0,386
4,75	-0,05	-0,05	-0,049	-0,05	-0,273	0,497
5	0,00	0,00	0,000	0,000	0,000	0,000

Software Release Number: X7r1a
Date: 06. 02. 2023.
Tested by: InterCAD
File name: Lattorsbuckling7DOF_v01.axs; Lattorsbuckling_shell_v01.axs

Thema	Verification of Euler Buckling shapes (Lateral torsional buckling)
Analysis Type	Lateral torsional buckling
Geometry	Version A.) Beam model (7DOF)

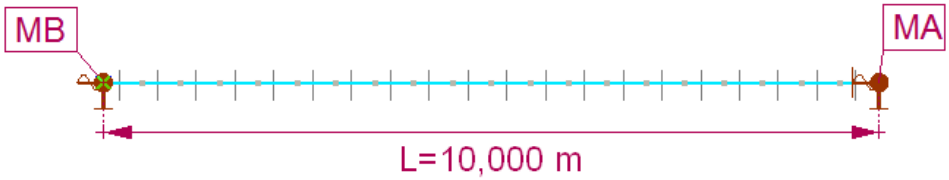

Front view

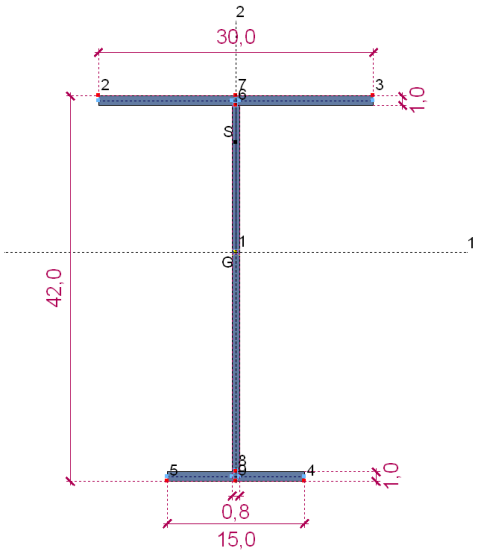

Cross section (I_Z= 2533 cm^4, I_t= 21,8 cm^4, I_w=420623 cm^6, β_y=28,8cm)

Version B.) Shell elements

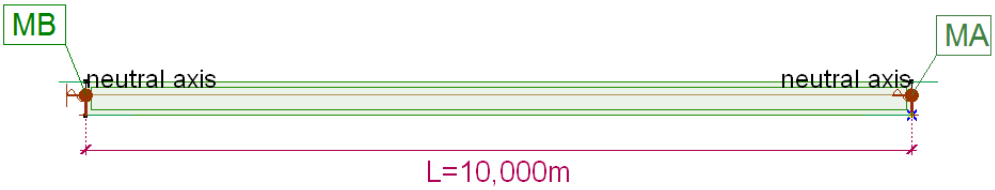

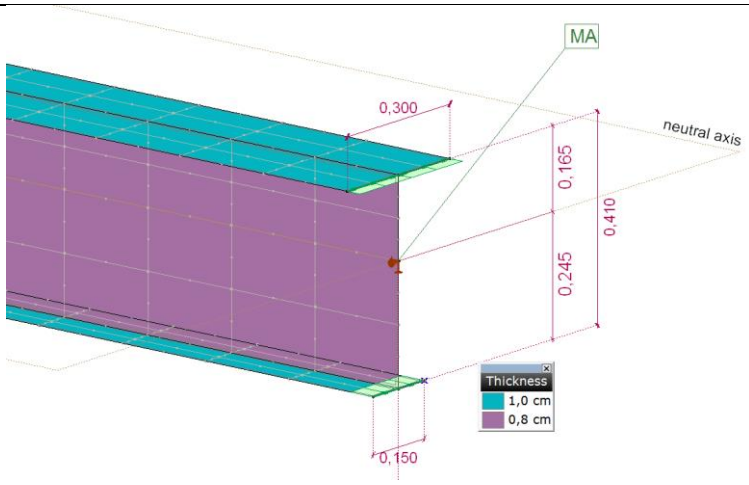

Loads	Bending moment at both ends of beam M_A = 1,0 kNm, M_B = 1,0kNm (in terms of shell model moments are applied as surface edge loads)
Boundary Conditions	eX=eY=eZ=φX=φY=φZ=0 at A eX=eY=eZ=φX=φY=φZ=0 at B kz = kw = 1
Material Properties	E=21000 kN / cm^2 ν=0,3
Element types	Version A.) beam element (7DOF) Version B.) shell elements
Target	Comparison of buckling shapes in case of beam model and the alternative shell model (for lateral torsional buckling) with the analytical solution

Analytical solution of angle of rotaion φ(x) :
[2]

$$\varphi(x) = D_1 \sin(mx)$$

$$m = \frac{k\pi}{L} \text{ with } k \in \mathbb{N}.$$

Results:

1st Mode – k=1

Beam-model (7DOF)

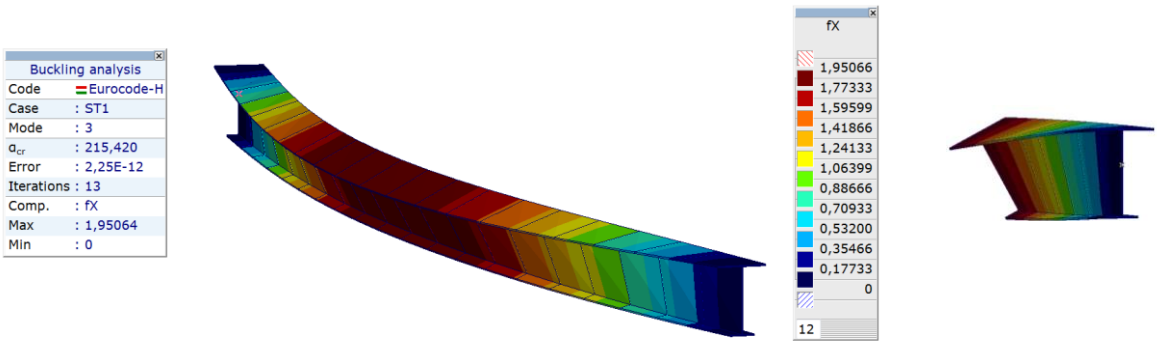

Shell-model

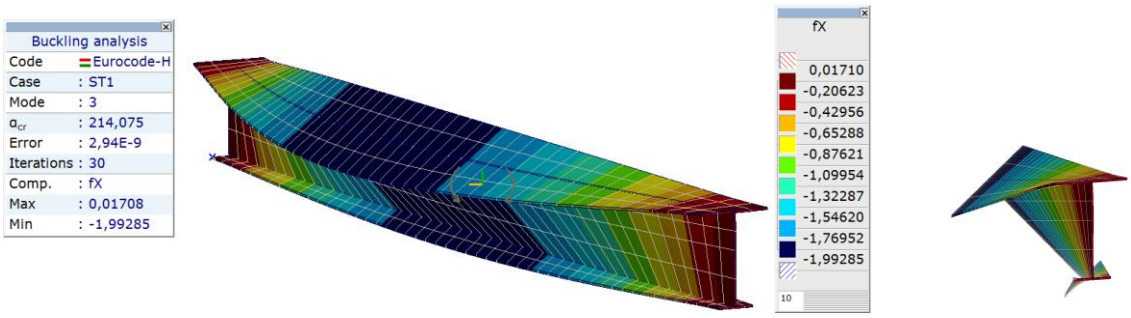
Buckling analysis
Code Eurocode-H
Case : ST1
Mode : 3
α_{cr} : 214,075
Error : 2,94E-9
Iterations : 30
Comp. : fX
Max : 0,01708
Min : -1,99285
fX
0,01710
-0,20623
-0,42956
-0,65288
-0,87621
-1,09954
-1,32287
-1,54620
-1,76952
-1,99285
10

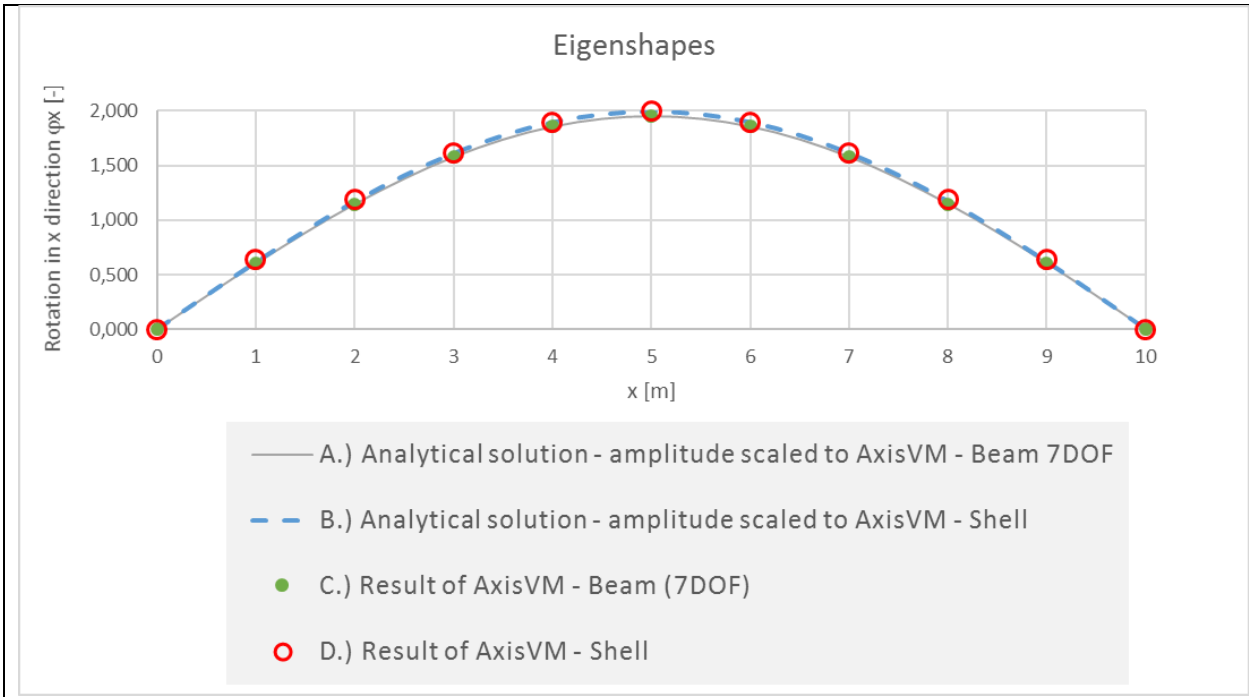

MODE1 k=1						
Coordinate in x-direction	Analytical solution		Results of AxisVM		Difference A./C.	Difference B./D.
	A.)	B.)	C.)	D.)		
	max amplitude scaled to AxisVM (Beam) D1sin(kπz/L) with k=1; D1=1,951	max amplitude scaled to AxisVM (Shell) D1sin(kπx/L) with k=1; D1=1,993	Beam (7DOF)	Shell Investigated in the neutral axis		
x	φx	φx	φx	φx	[%]	[%]
[m]	[-]	[-]	[-]	[-]		
0	0,000	0,000	0,000	0,00000	0,000	0,000
1	0,603	0,616	0,603	0,63926	0,000	3,666
2	1,147	1,171	1,147	1,18592	0,000	1,227
3	1,578	1,612	1,578	1,61909	0,000	0,422
4	1,855	1,895	1,855	1,89708	0,000	0,093
5	1,951	1,993	**1,951**	**1,993**	0,000	0,000
6	1,855	1,895	1,855	1,89708	0,000	0,093
7	1,578	1,612	1,578	1,61909	0,000	0,422
8	1,147	1,171	1,147	1,18592	0,000	1,227
9	0,603	0,616	0,603	0,63926	0,000	3,666
10	0,000	0,000	0,000	0,00000	0,000	0,000

2nd Mode – k=2

Beam-model (7DOF)

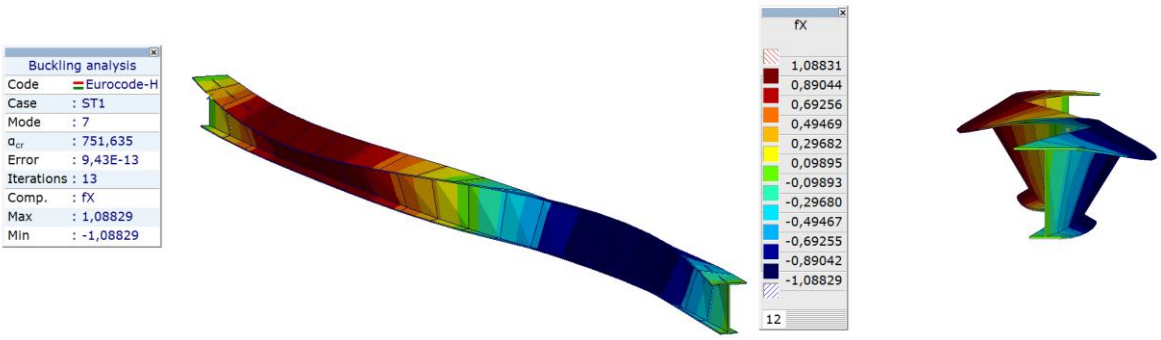

Shell-model

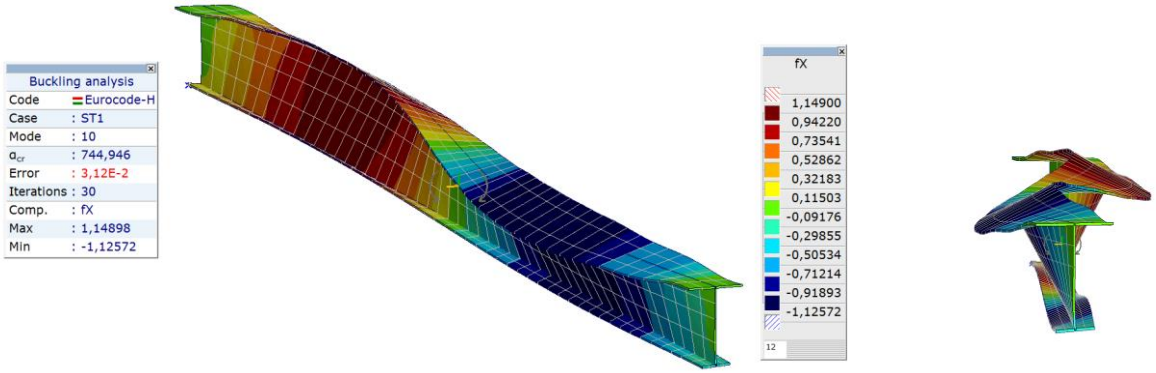

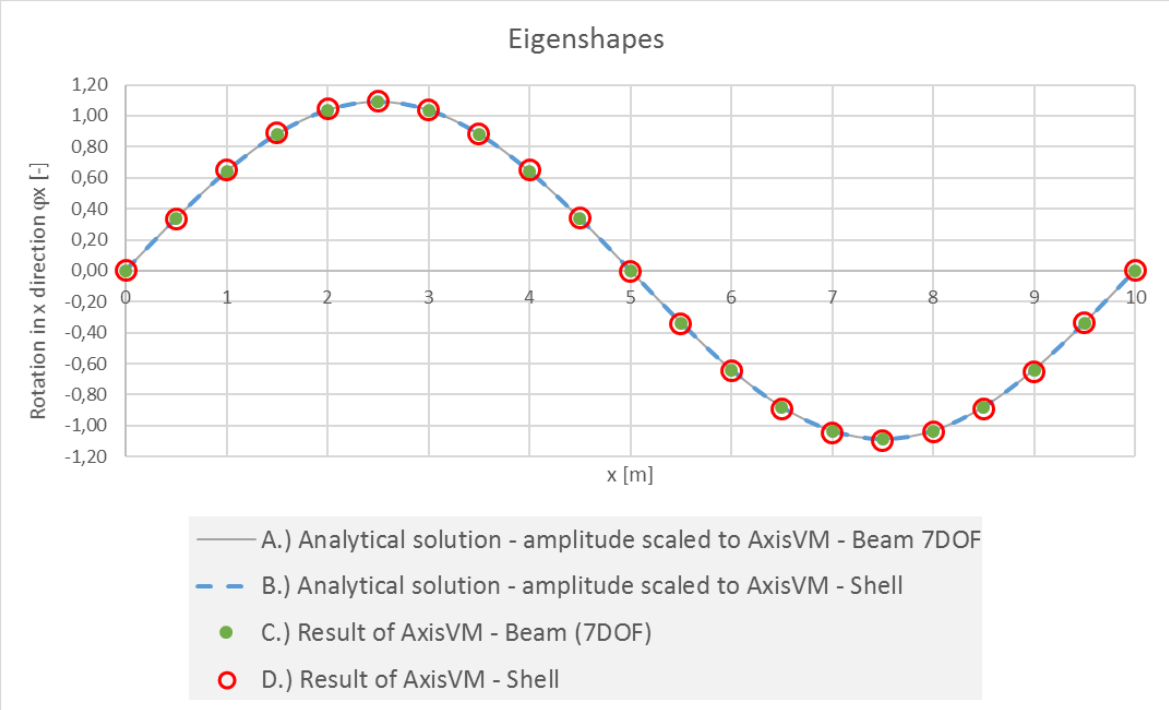

Coordinate in x-direction	Analytical solution		Results of AxisVM		Difference A./C.	Difference B./D.
	A.)	B.)	C.)	D.)		
	max amplitude scaled to AxisVM (Beam) D1sin(kπx/L) with k=1; D1=1,088	max amplitude scaled to AxisVM (Shell) D1sin(kπx/L) with k=1; D1=1,099	Beam (7DOF)	Shell Investigated in the neutral axis		
x	φx	φx	φx	φx	[%]	[%]
[m]	[-]	[-]	[-]	[-]		
0	0,00	0,00	0,000	0,000	0,000	0,000
0,5	0,34	0,34	0,336	0,334	0,000	-0,695
1	0,64	0,64	0,640	0,652	0,000	1,825
1,5	0,88	0,88	0,880	0,890	-0,001	1,088
2	1,04	1,04	1,035	1,047	-0,001	1,160
2,5	1,09	1,09	**1,088**	**1,098**	0,000	0,892
3	1,04	1,04	1,035	1,041	-0,001	0,603
3,5	0,88	0,88	0,880	0,884	-0,001	0,384
4	0,64	0,64	0,640	0,651	0,000	1,699
4,5	0,34	0,34	0,336	0,339	0,000	0,887
5	0,00	0,00	0,000	-0,001	0,000	0,000
5,5	-0,34	-0,34	-0,336	-0,339	0,000	0,849
6	-0,64	-0,64	-0,640	-0,646	0,000	0,992
6,5	-0,88	-0,88	-0,880	-0,889	-0,001	0,970
7	-1,04	-1,04	-1,035	-1,046	-0,001	1,057
7,5	-1,09	-1,09	**-1,088**	**-1,099**	0,000	0,967
8	-1,04	-1,04	-1,035	-1,042	-0,001	0,660
8,5	-0,88	-0,88	-0,880	-0,889	-0,001	1,015
9	-0,64	-0,64	-0,640	-0,655	0,000	2,366
9,5	-0,34	-0,34	-0,336	-0,338	0,000	0,406
10	0,00	0,00	0,000	0,000	0,000	0,000

Software Release Number: X7r1a
Date: 06. 02. 2023.
Tested by: InterCAD
File name: Platebuckling_aperb2_v01.axs

Thema	Verification of Euler Buckling shapes (Plate buckling)
Analysis Type	Plate buckling
Geometry	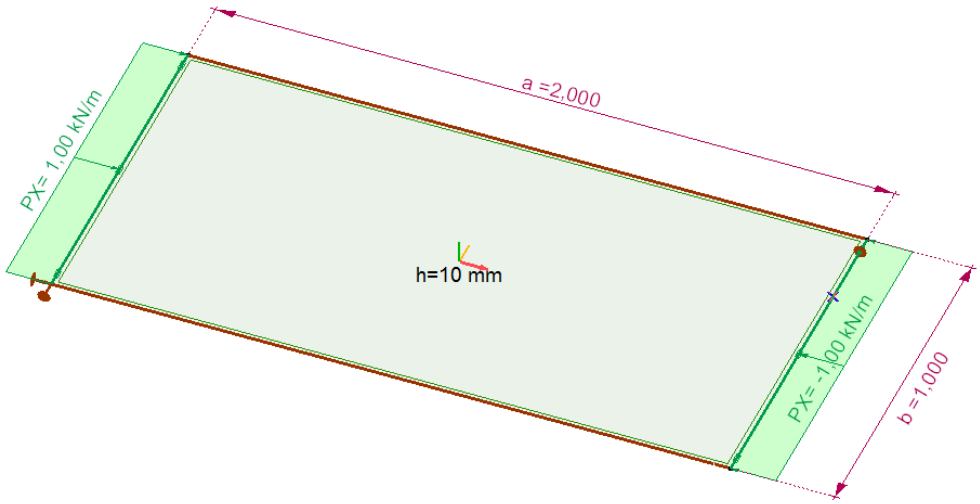
Loads	Distributed compression load at the x=0 and x=a edges x=0 and x=a Px= 1,0 kN/m
Boundary Conditions	Line supports: Kx=Ky=-Kxx=Kyy=Kzz=0 at x=0;x=a Kx=Ky=-Kxx=Kyy=Kzz=0 at y=0;y=b Additional nodal supports to prevent rigid body motion, but allow transverse contraction: eZ= φX=φY=φZ=0 at x,y=(0,0) eX=eZ= φX=φY=φZ=0 at x,y=(a,b)
Material Properties	E=21000 kN / cm^2 ν=0,3
Element types	shell elements
Mesh	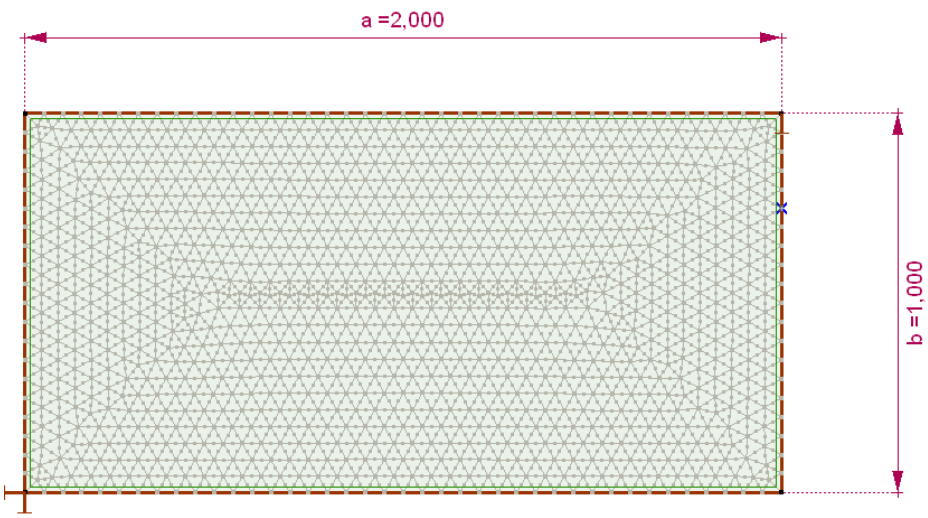
Target	Comparison of buckling shapes of AxisVM calculation with the analytical solution

Analytical solution of vertical deflection w(x,y) :
[3]

$$w(x,y) = A \sin\frac{m\pi x}{a} \sin\frac{n\pi y}{b} \qquad a=2b \;\text{»}\; m=2;\; n=1$$

Results:

1st Mode – m=2, n=1

AxisvM restult

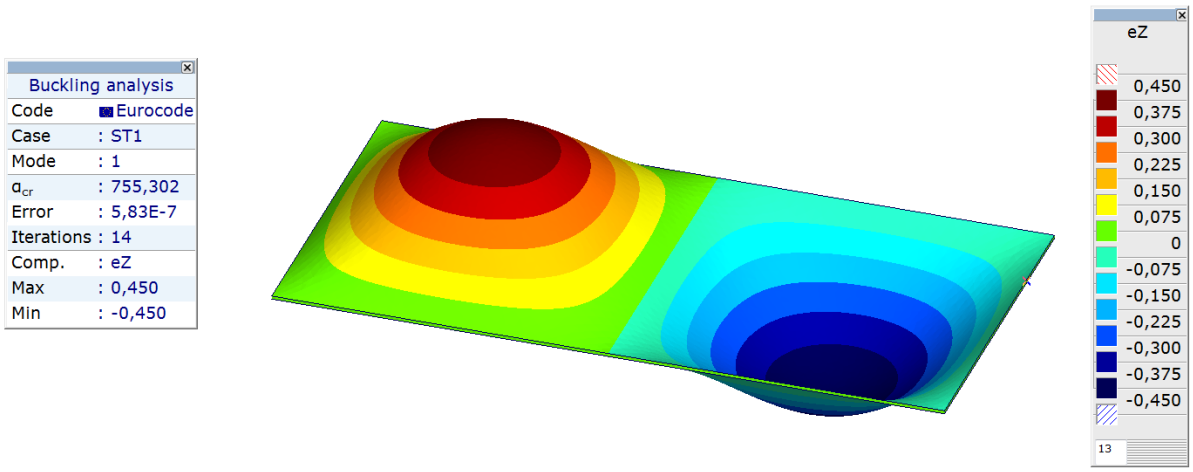

Analitycal solution

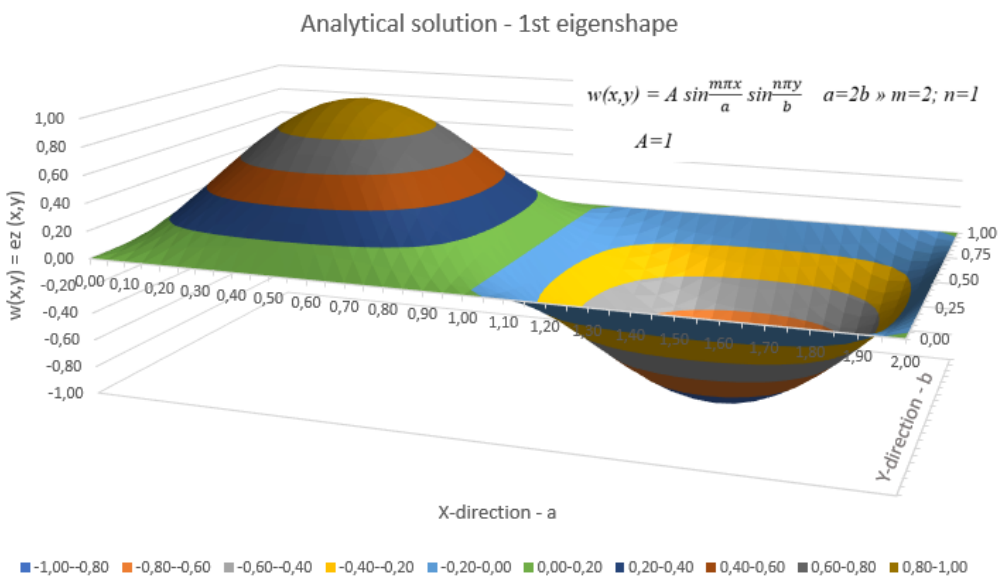

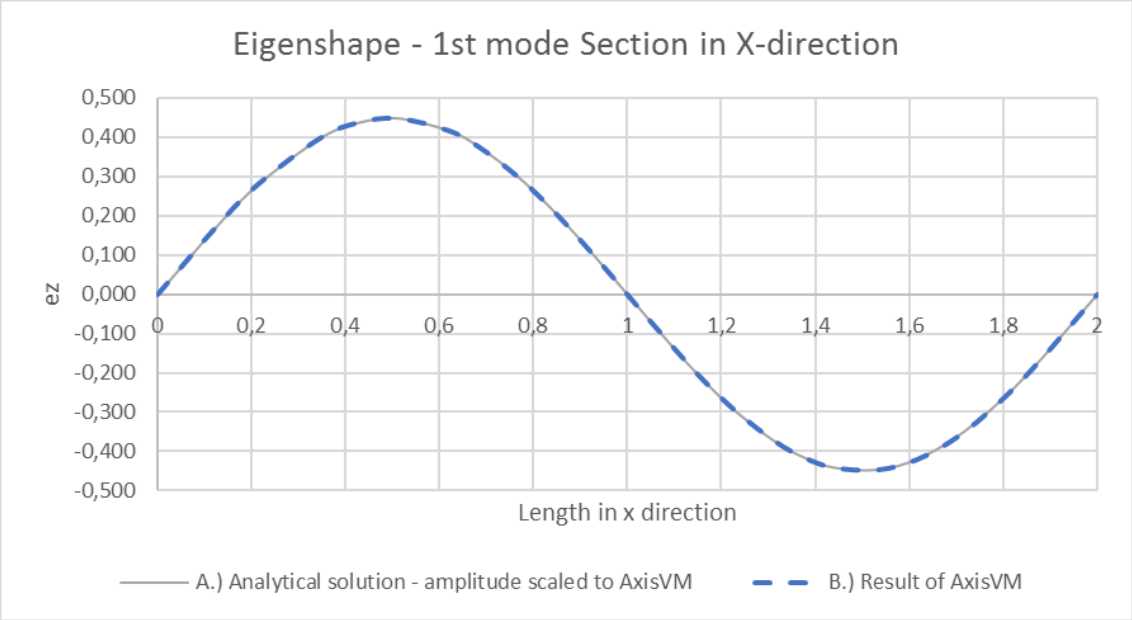

MODE1 - X direction (y=b/2)			
Coordinate in X-direction	Analytical solution	Results of AxisVM	Difference
	A.) max amplitude scaled to AxisVM sin(mπx/a) with m=2 ; A=0,449	B.)	
x	ez	ez	A/B
[m]	[-]	[-]	[%]
0	0,000	0,000	0,000
0,13103	0,180	0,181	0,745
0,21758	0,284	0,285	0,504
0,34481	0,397	0,398	0,330
0,4232	0,436	0,437	0,230
0,51083	0,449	**0,449**	0,058
0,62134	0,417	0,417	0,055
0,68552	0,375	0,375	0,034
0,76381	0,303	0,303	-0,139
0,82492	0,235	0,235	0,128
0,88599	0,157	0,157	-0,257
0,96395	0,051	0,051	0,505
1,014	-0,020	-0,02	1,292
1,11402	-0,157	-0,157	-0,265
1,17503	-0,235	-0,235	0,154
1,23607	-0,303	-0,303	-0,098
1,31441	-0,375	-0,375	0,048
1,37604	-0,415	-0,416	0,149
1,44049	-0,441	-0,442	0,186
1,49962	-0,449	**-0,449**	0,000
1,53441	-0,446	-0,447	0,139
1,61578	-0,420	-0,421	0,327
1,69889	-0,364	-0,366	0,501
1,78402	-0,282	-0,283	0,420
1,87007	-0,178	-0,179	0,431
2	0,000	0,000	0,000

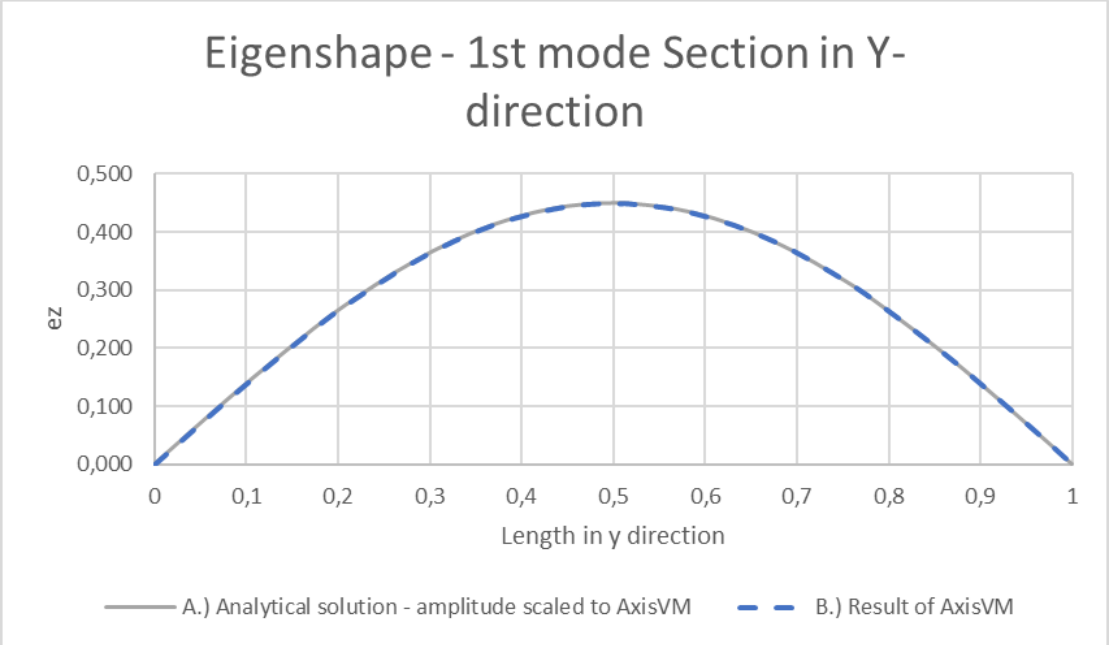

MODE1 - Y direction (x=a/4)			
Coordinate in Y-direction	Analytical solution	Results of AxisVM	Difference
	A.) max amplitude scaled to AxisVM sin(nπy/b) with n=1 ; A=0,449	B.)	
y	ez	ez	A/B
[m]	[-]	[-]	[%]
0	0,000	0,000	0,000
0,08673	0,121	0,121	0,140
0,17370	0,233	0,234	0,412
0,21730	0,283	0,284	0,261
0,25910	0,326	0,327	0,172
0,26286	0,330	0,331	0,285
0,30461	0,367	0,368	0,263
0,34818	0,399	0,4	0,278
0,39176	0,423	0,424	0,167
0,4347	0,440	0,44	0,094
0,47137	0,447	0,448	0,182
0,50471	0,449	**0,449**	0,011
0,51679	0,448	0,449	0,139
0,56497	0,440	0,44	0,073
0,60957	0,423	0,423	0,080
0,65332	0,398	0,399	0,272
0,69684	0,366	0,367	0,313
0,74033	0,327	0,328	0,309
0,78373	0,282	0,283	0,307
0,87037	0,178	0,178	0,090
0,95681	0,061	0,061	0,433
1	0,000	0,000	0,000

Design

Software Release Number: X7r1a
Date: 09. 02. 2023.
Tested by: InterCAD
File name: RC column1.axs

Thema	N-M interaction curve of cross-section (EN 1992-1-1:2004).
Analysis Type	Linear static analysis+design.
Geometry	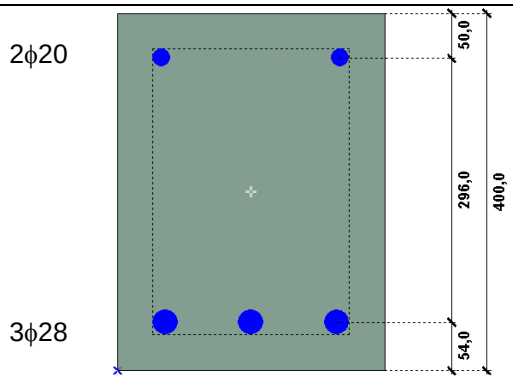 Section: 300x400 mm Covering: 40 mm
Loads	Arbitrary.
Boundary Conditions	Arbitrary.
Material Properties	Concrete: f_{cd}=14,2 N/mm^2 e_{c1}=0,002 e_{cu}=0,0035 (parabola-constans σ-ε diagram) Steel: f_{sd}=348 N/mm^2 e_{su}=0,015
Target	Compare the program results with with hand calculation at keypoints of M-N interaction curve.
Results	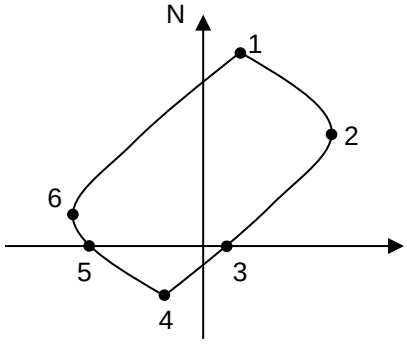

	N [kN]	M [kNm]	N AxisVM	M(N) AxisVM	e %
1	-2561	+61	-2565,4	+61,3	+0,7
2	-1221	+211	-1200	+209,6	-0,6
3	0	+70	0	+70,5	+0,7
4	+861	-61	865,4	-61,3	+0,7
5	0	-190	0	-191,2	+0,6
6	-362	-211	-350	-209,6	-0,6

Reference: Dr. Kollár L. P., Vasbetonszerkezetek I. Műegyetemi kiadó

Software Release Number: X7r1a
Date: 09. 02. 2023.
Tested by: InterCAD
File name: RCbeam.axs

Thema	RC beam deflection according to EC2, EN 1992-1-1:2010.
Analysis Type	Materially nonlinear analysis.
Geometry	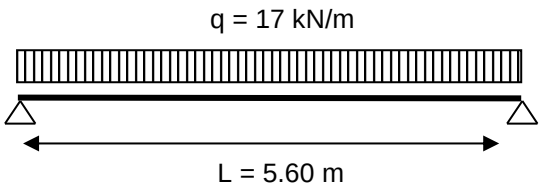 Side view 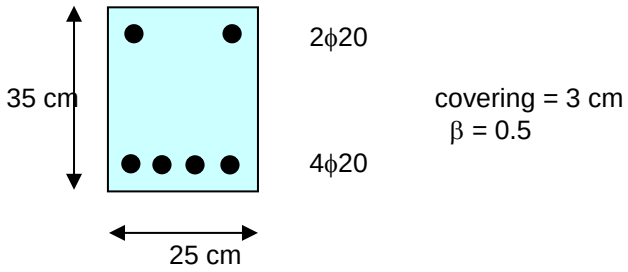 Section
Loads	q = 17 kN /m distributed load
Boundary Conditions	Simply supported beam.
Material Properties	Concrete: C25/30, φ = 2.1 Steel: B500B ε=0.4‰ shrinkage strain
Element types	Simple 12 DOF beam elements (Euler-Bernoulli beam)
Target	$e_{z,\,max}$

Results without shrinkage	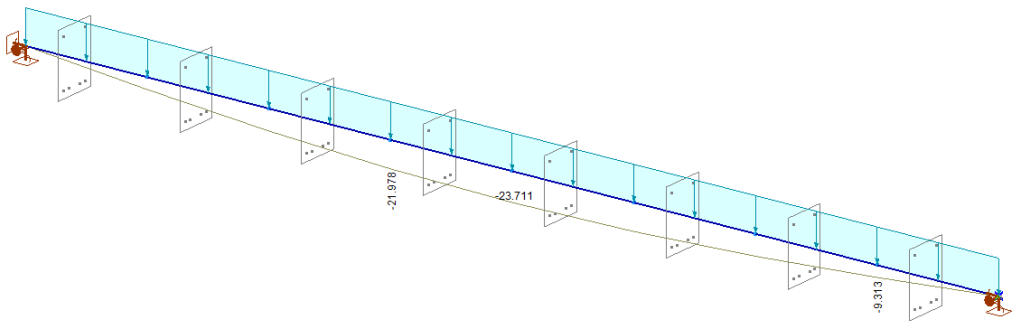 Diagram e_z <u>Hand calculation by integration of κ diagram:</u> $\kappa = \zeta \cdot \kappa_{II} + (1-\zeta) \cdot \kappa_I \quad \zeta = 1 - \beta \cdot \left(\frac{M_{cr}}{M}\right)^2$ $e = 19.33mm$ where, κ_I is the curvature which was calculated based on uncracked section κ_{II} is the curvature which was calculated based on cracked section <u>Calculation with AxisVM:</u> e = 19.49 mm (difference ~ 1%)
Results with shrinkage	<u>Hand calculation by integration of κ diagram:</u> $\kappa = \zeta \cdot \kappa_{II} + (1-\zeta) \cdot \kappa_I \quad \zeta = 1 - \beta \cdot \left(\frac{M_{cr}}{M}\right)^2$ $e = 23.02mm$ where, κ_I is the curvature which was calculated based on uncracked section κ_{II} is the curvature which was calculated based on cracked section <u>Calculation with AxisVM:</u> e = 23.43 mm (difference ~ 2%)

Software Release Number: X7r1a
Date: 09. 02. 2023.
Tested by: InterCAD
File name: RC_Slab_1.axs

Thema	RC one-way slab deflection according to EC2, EN 1992-1-1:2010.
Analysis Type	Materially nonlinear analysis.
Geometry	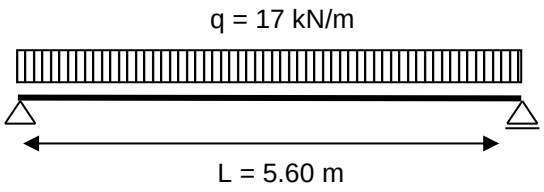 Side view Section: 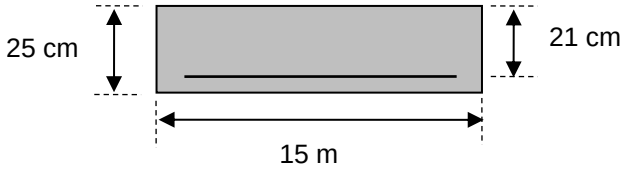 As = ϕ16/200 β = 0.5
Loads	q = 17 kN /m distributed load
Boundary Conditions	Simply supported one-way slab.
Material Properties	Concrete: C25/30, φ = 2.1, v = 0.0 Steel: B500B ε=0.4‰ shrinkage strain
Element types	triangle shell elements
Target	$e_{z,\,max}$

Results - without shrinkage	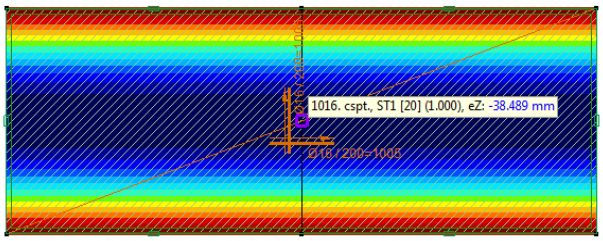 NL behaviour in ε-N + κ-M 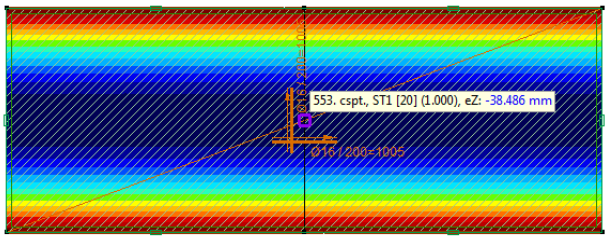 NL behaviour in κ-M only Diagram e_z <u>Hand calculation by integration of κ diagram:</u> $\kappa = \zeta \cdot \kappa_{II} + (1-\zeta) \cdot \kappa_I \quad \zeta = 1 - \beta \cdot \left(\frac{M_{cr}}{M}\right)^2$ $e = 37.43mm$ where, κ_I is the curvature which was calculated based on uncracked section κ_{II} is the curvature which was calculated based on cracked section <u>Calculation with AxisVM:</u> e = 38.49 mm (NL ε-N + κ-M) (difference ~ +3%) e = 38.49 mm (NL κ-M) (difference ~ +3%)
Results - with shrinkage	<u>Hand calculation by integration of κ diagram:</u> $\kappa = \zeta \cdot \kappa_{II} + (1-\zeta) \cdot \kappa_I \quad \zeta = 1 - \beta \cdot \left(\frac{M_{cr}}{M}\right)^2$ $e = 44.43mm$ where, κ_I is the curvature which was calculated based on uncracked section κ_{II} is the curvature which was calculated based on cracked section <u>Calculation with AxisVM:</u> e = 46.92 mm (NL ε-N + κ-M) (difference ~ +5%) e = 46.80 mm (NL κ-M) (difference ~ +5%)

Software Release Number: X7r1a
Date: 09. 02. 2023.
Tested by: InterCAD
File name: RCcolumn.axs. RCLcolumn.axs

Thema	Nonlinear analysis of RC columns according to EC2, EN 1992-1-1:2010.
Analysis Type	Materially and geometrically nonlinear analysis.
Geometry	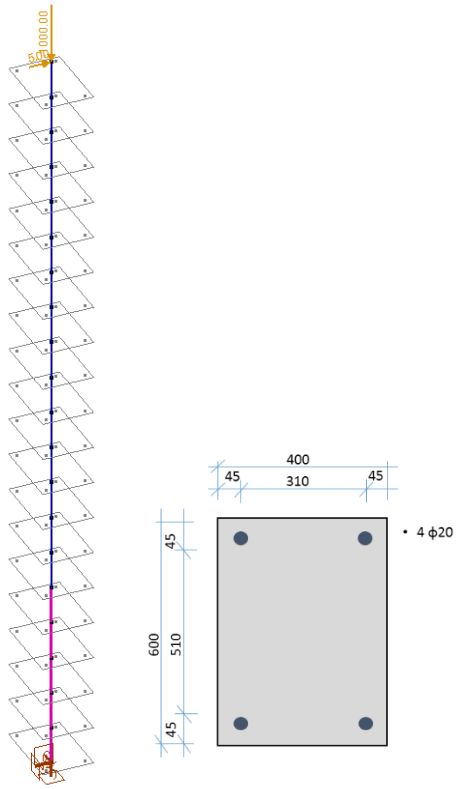 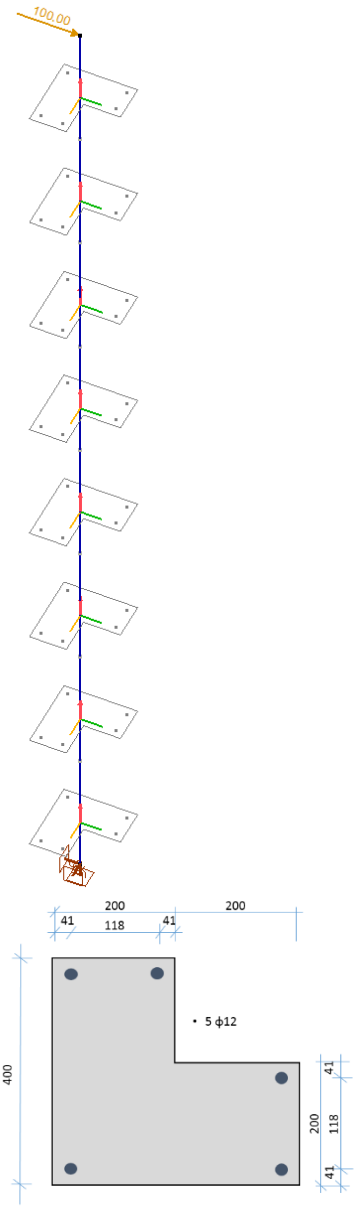
Loads	Concentrated force on the top
Boundary Conditions	Cantilever
Material Properties	Concrete: C25/30, φ = 2,0 Steel: B500B
Element types	Simple 12 DOF beam elements (Euler-Bernoulli beam)
Target	$e_{z,\,max}$

Results	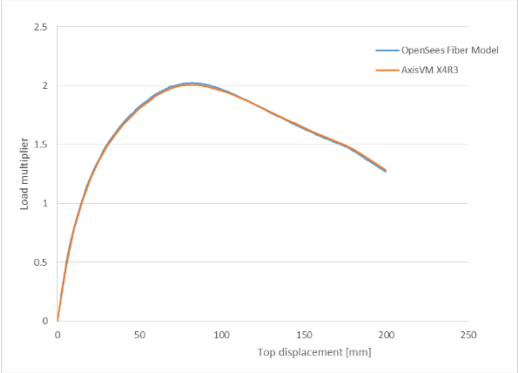	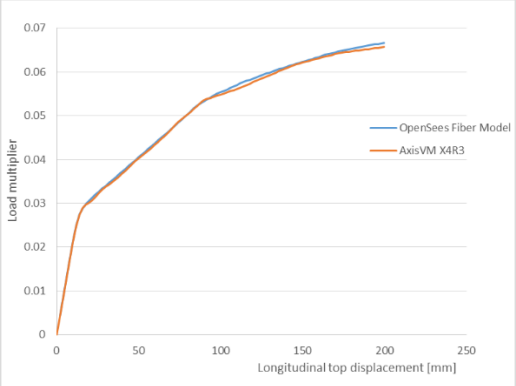 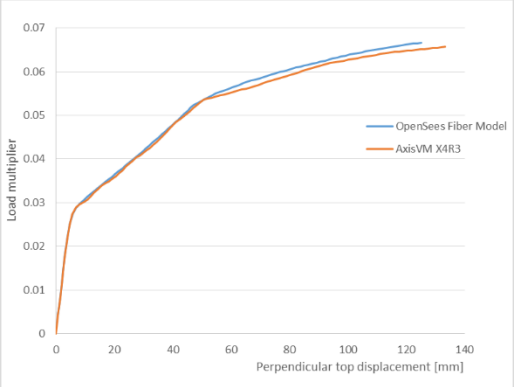 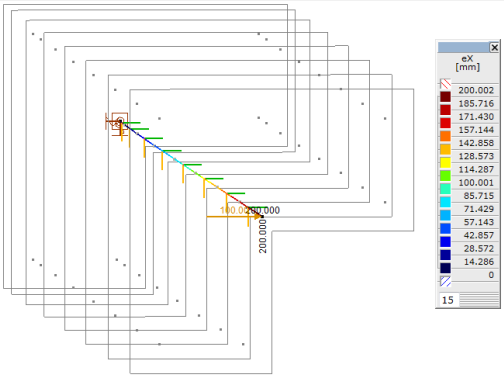

Software Release Number: X7r1a
Date: 15. 02. 2023.
Tested by: InterCAD
File name: RCcolumn2.axs

Thema	Axially loaded RC column check according to EC2, EN 1992-1-1:2010.
Analysis Type	Materially and geometrically linear analysis.
Geometry	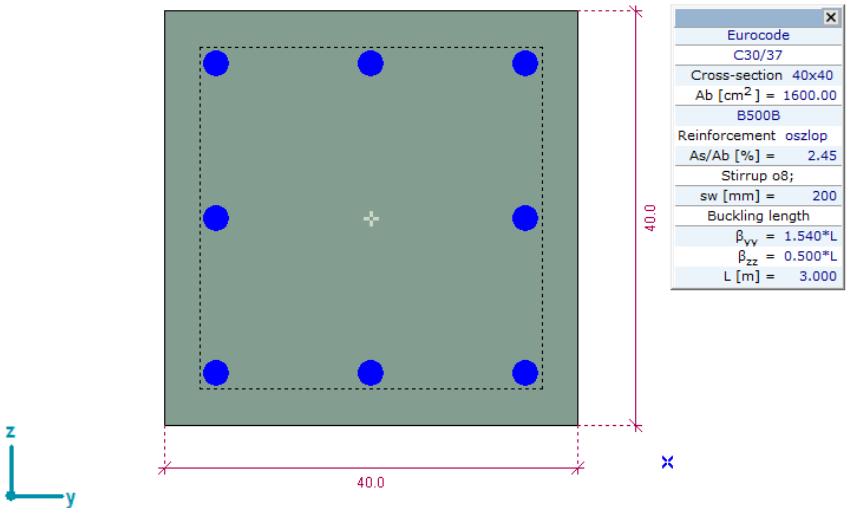 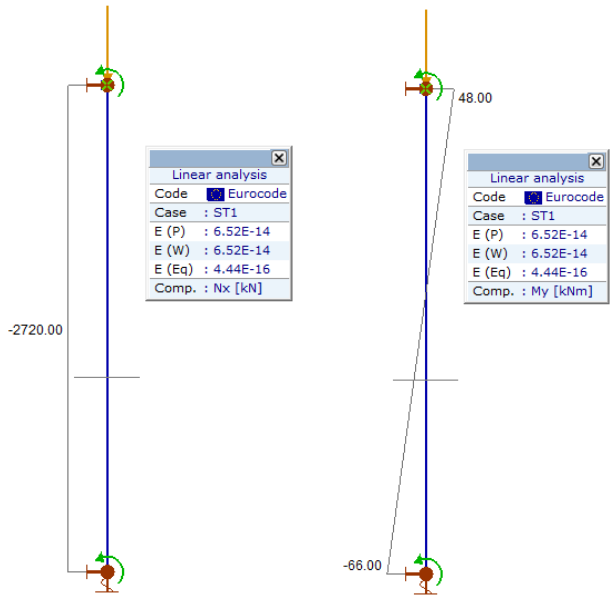
Loads	Concentrated force N_{Ed} = 2720 kN Bending moments: at the top M_{yEd} = 48 kNm at the bottom M_{yEd} = 66 kNm
Material Properties	Concrete: C30/37, φ = 2,0 Steel: B500B
Element types	Simple 12 DOF beam elements (Euler-Bernoulli beam)
Target	Calculate eccentricities according to EN 1992-1

Results

[cm]

		Hand calculation				AxisVM				
		$\lvert e_0 \rvert$	e_i	e_2	e_{tot}	$\lvert e_0 \rvert$	e_i	e_2	e_{tot}	e %
x-z plane 	Bottom	2.43	1.16	2.73	**6.31**	2.43	1.16	2.73	**6.31**	0
	Middle	0.97	0**	0**	**2***	0.97	0**	0**	**2***	0
	Top	1.76	1.16	2.73	**5.65**	1.76	1.16	2.73	**5.65**	0
x-y plane 	Bottom	0	0.38	0	**2***	0	0.38	0	**2***	0
	Middle	0	0.38	0	**2***	0	0.38	0	**2***	0
	Top	0	0.38	0	**2***	0	0.38	0	**2***	0

* due to minimal eccentricity requirement
** due to the buckling

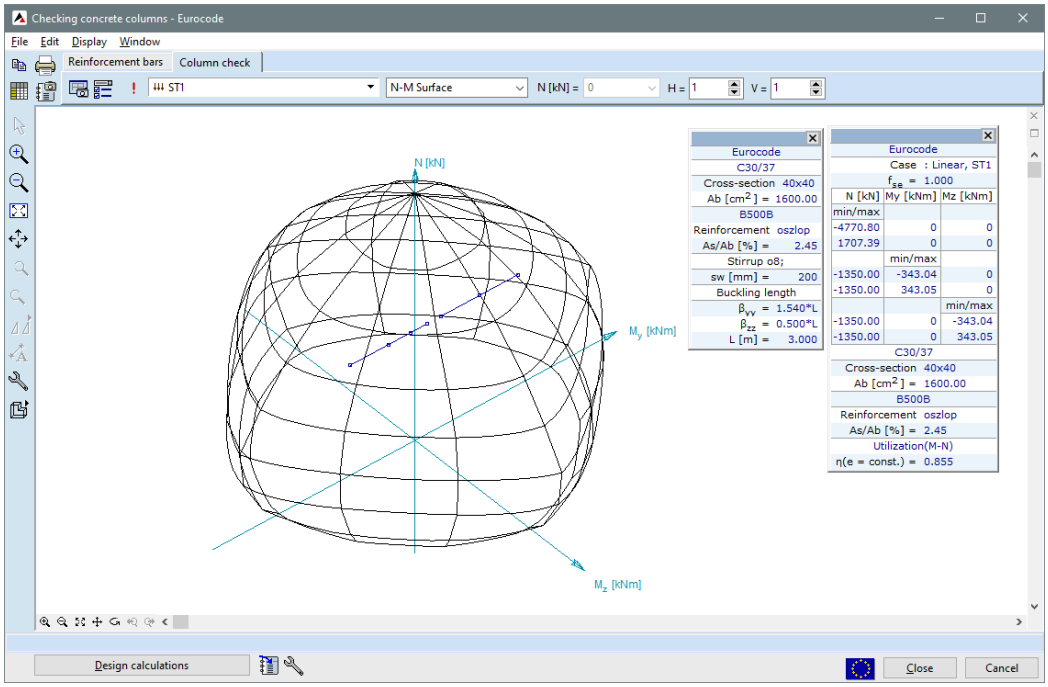

Software Release Number: X7r1a
Date: 15. 02. 2023.
Tested by: InterCAD
File name: Rccolumn3.axs

Thema	Axially loaded RC column check according to EC2, EN 1992-1-1:2010.
Analysis Type	Materially and geometrically linear analysis.
Geometry	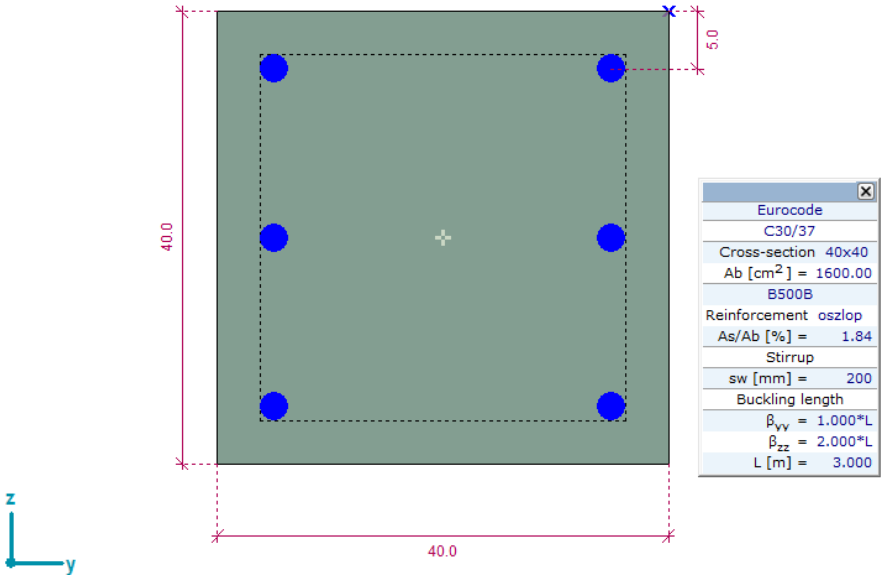 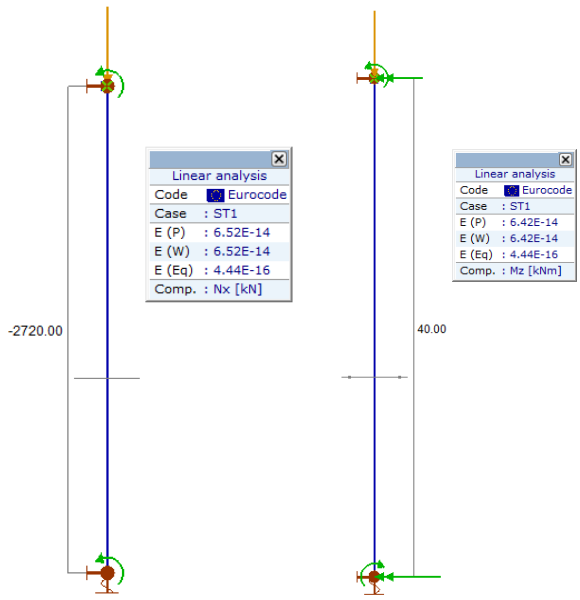
Loads	Concentrated force N_{Ed} = 2720 kN Bending moments: at the top M_{zEd} = 40 kNm at the bottom M_{zEd} = 40 kNm
Material Properties	Concrete: C30/37, φ = 2,0 Steel: B500B
Element types	Simple 12 DOF beam elements (Euler-Bernoulli beam)
Target	Calculate eccentricities according to MSZ EN 1992-1

Results

[cm]

		Hand calculation				AxisVM				
		$\lvert e_0 \rvert$	e_i	e_2	e_{tot}	$\lvert e_0 \rvert$	e_i	e_2	e_{tot}	e %
x-z plane 	Bottom	0	0.75	0**	**2***	0	0.75	0**	**2***	0
	Middle	0	0.75	1.42	**2.17**	0	0.75	1.42	**2.17**	0
	Top	0	0.75	0**	**2***	0	0.75	0**	**2***	0
x-y plane 	Bottom	1.47	1.5	3.69	**6.66**	1.47	1.5	3.69	**6.66**	0
	Middle	1.47	0.75 **	2.6**	**4.82**	1.47	0.75 **	2.6**	**4.82**	0
	Top	1.47	0**	0**	**2***	1.47	0**	0**	**2***	0

* due to minimal eccentricity requirement
** due to the buckling

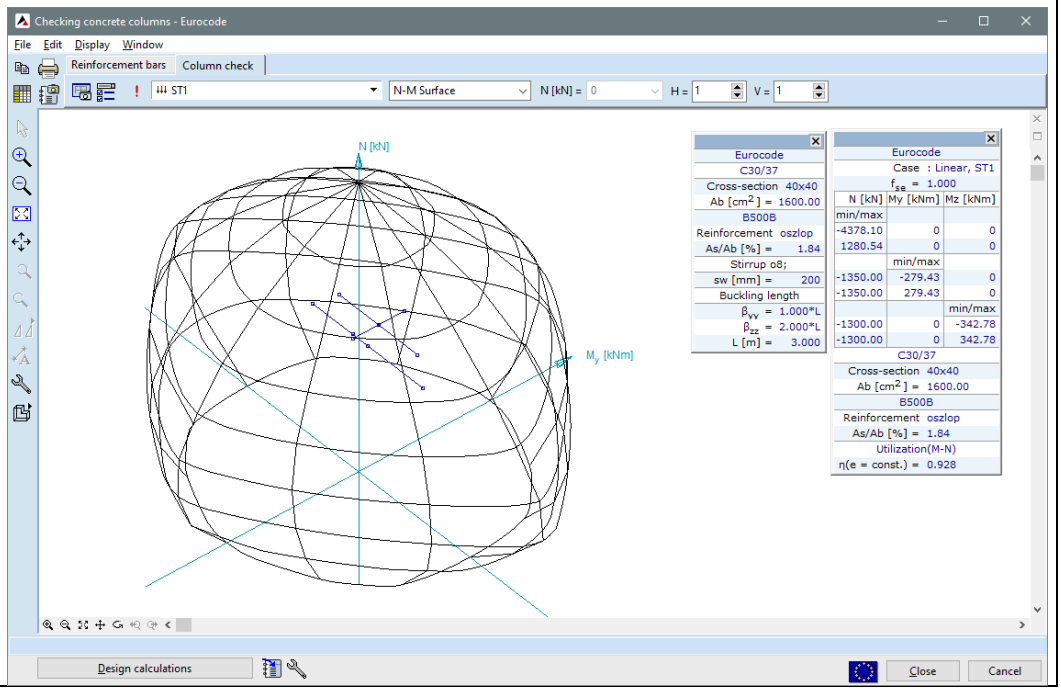

Software Release Number: X7r1a
Date: 14. 02. 2023.
Tested by: InterCAD
File name: RCcolumnVT.axs

Thema	Shear and torsion check of RC column according to EC2, EN 1992-1-1:2010.
Analysis Type	Materially and geometrically linear analysis.
Geometry	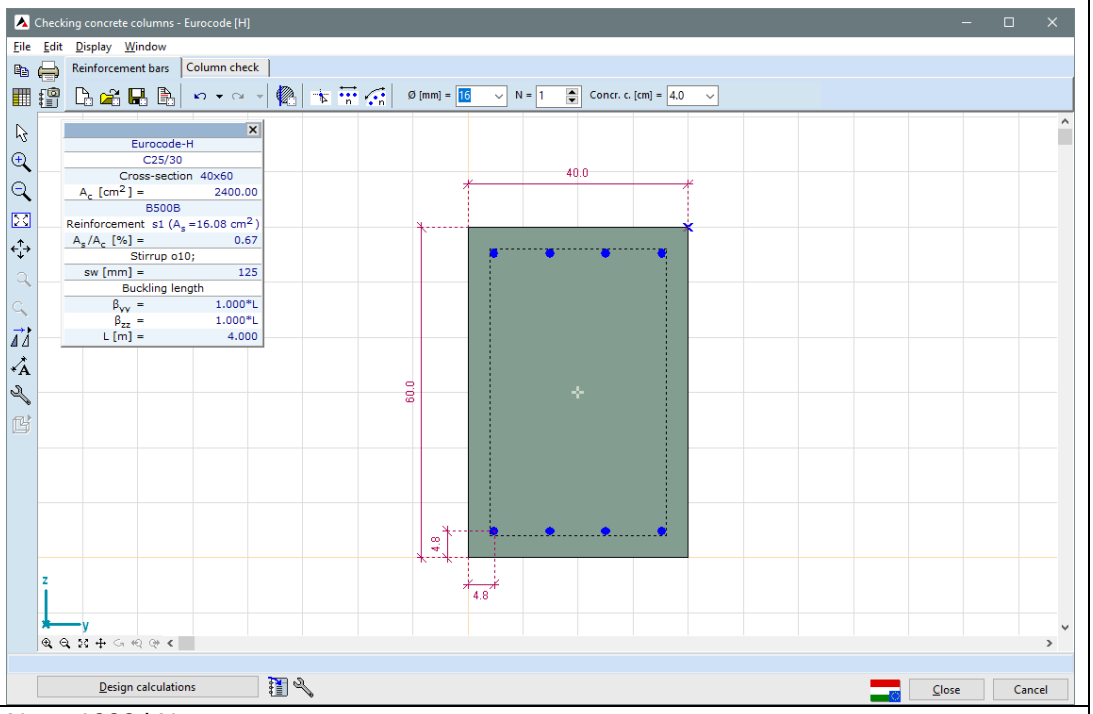
Loads	N_{Ed} = 1000 kN V_{zEd}= 100 kN T_{xEd}=60 kNm
Properties	Concrete: C25/30 Steel: B500B $A_{s1} = A_{s2} = 4\ \Phi16$ $A_{sw} = \Phi10/125$ c = 30 mm θ = 45°
Element types	Simple 12 DOF beam elements (Euler-Bernoulli beam)
Target	Shear and torsion check

Results

		Hand calculation	AxisVM	ε %
x-z plane	$V_{Rd,c}$ [kN]	199.1	199.0	<1
	$V_{Rd,s}$ [kN]	252.5	252.8	<1
	$V_{Rd,max}$ [kN]	1017.0	1018.5	<1
	$T_{Rd,c}$ [kNm]	38.7	38.6	<1
	$T_{Rd,max}$ [kNm]	177.5	177.5	0
	k_T [-]	0.817	0.817	0
	A_{st} [mm²]	780	780	0

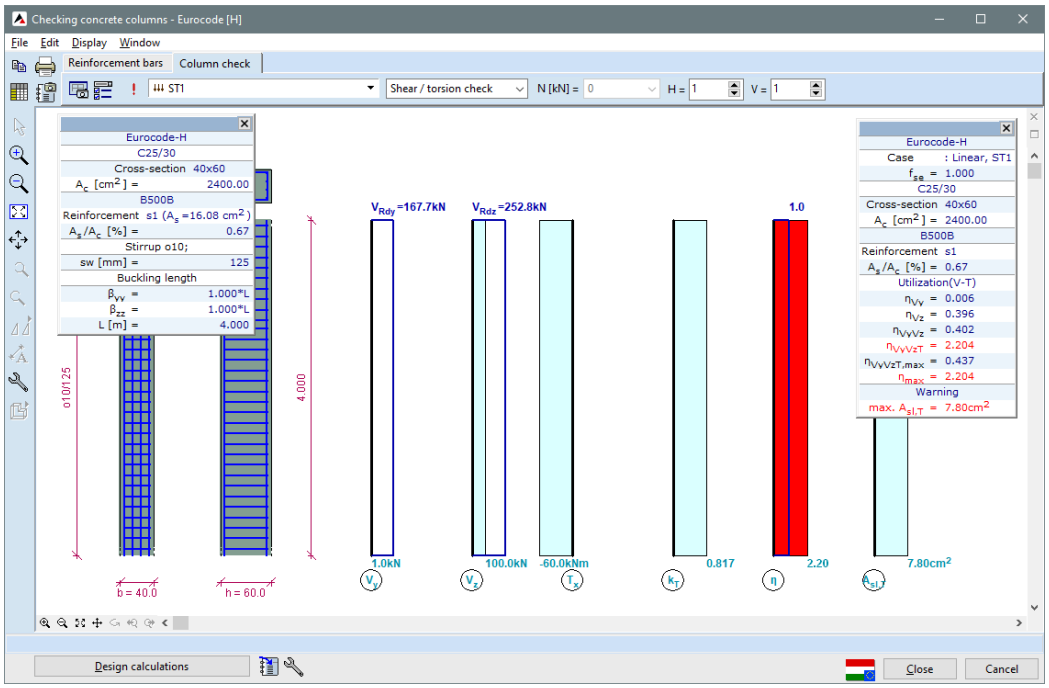

Software Release Number: X7r1a
Date: 15. 02. 2023.
Tested by: InterCAD
File name: beam2.axs

Thema	Required steel reinforcement of RC plate according to EC2, EN 1992-1-1:2004.
Analysis Type	Linear analysis.
Geometry	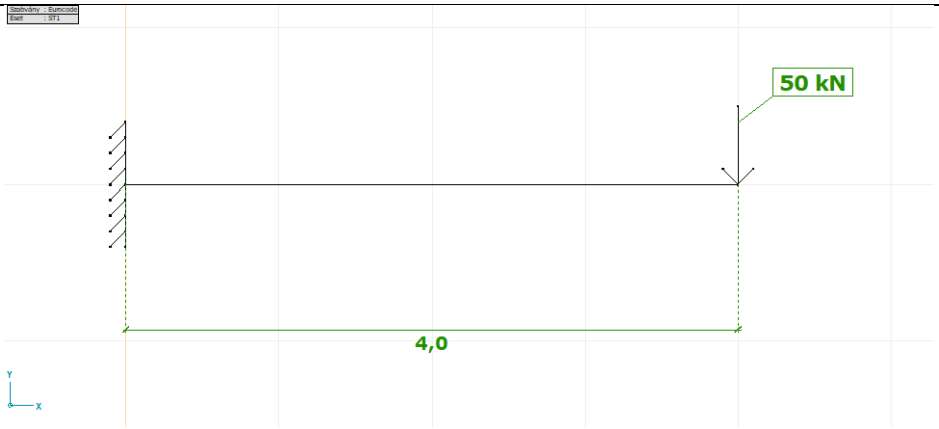 Side view 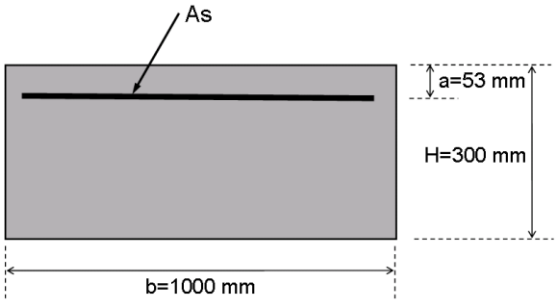 Cross-section
Loads	Pz = -50 kN point load
Boundary Conditions	Clamped cantilever plate. Fix line support on clamped edge. Nodal DOF: Plate in X-Y plane
Material Properties	Concrete: C25/30 Steel: B500A
Element types	Parabolic quadrilateral plate element (heterosis type)
Mesh	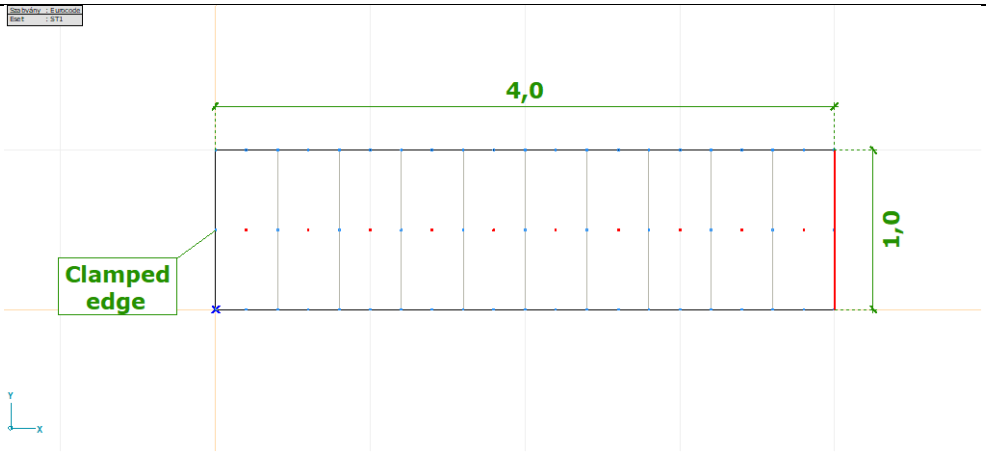 Top view

Target	A_{XT} steel reinforcement along x direction at the top of the support
Results	

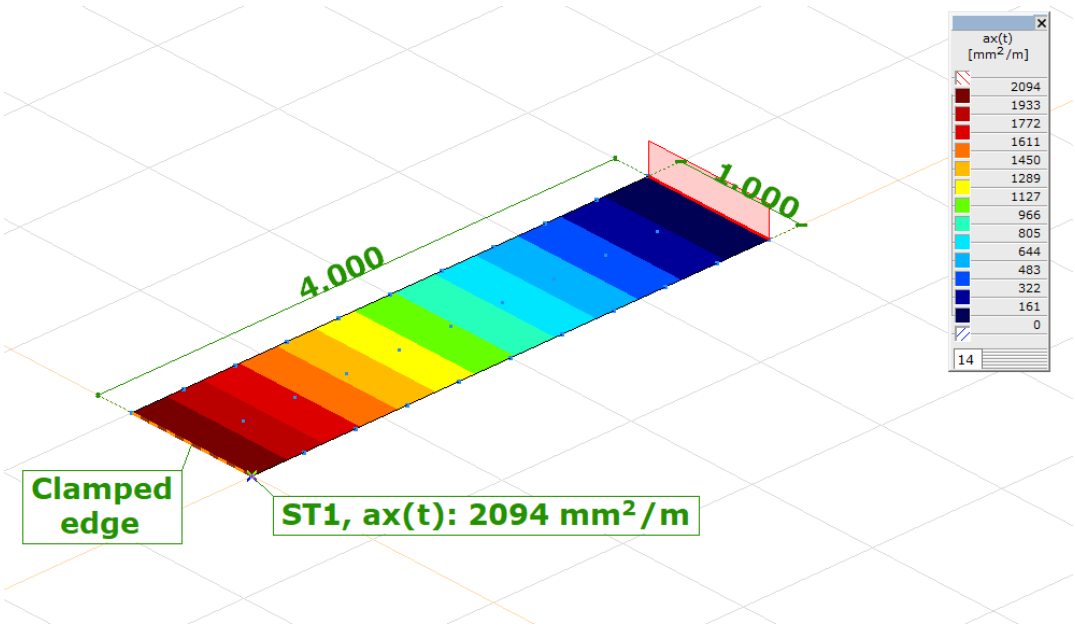

Diagram A_{XT}

Calculation according to EC2:

$$f_{cd} = \frac{25}{1{,}5} = 16{,}6 \ \ N/mm^2 \qquad f_{yd} = \frac{500}{1{,}15} = 435 \ \ N/mm^2$$

$$\xi_{c0} = \frac{c \cdot \varepsilon_{cu} \cdot E_S}{\varepsilon_{cu} \cdot E_S + f_{yd}} = \frac{0{,}85 \cdot 0{,}0035 \cdot 20000}{0{,}0035 \cdot 20000 + 435} = 0{,}54$$

d = 300 – 53 = 247 mm

$$M_{sd} = M_{Rd} = b \cdot x_c \cdot f_{cd}\left(d - \frac{x_c}{2}\right) = 200 \ \ kNm \qquad x_c = \begin{Bmatrix} 439 > h \\ 55 \end{Bmatrix}$$

$$\xi_c = \frac{x_c}{d} = \frac{55}{247} = 0{,}22 < \xi_{c0} = 0{,}54$$ Steel reinforcement is yielding

$$A_S = \frac{b \cdot x_c \cdot f_{cd}}{f_{yd}} = \frac{55 \cdot 1000 \cdot 16{,}6}{435} = 2099 \ \ mm^2$$

Calculation with AxisVM:

A_{XT} = 2094 mm^2/m

Different = -0,3 %

Software Release Number: X7r1a
Date: 20. 02. 2023.
Tested by: InterCAD
File name: 3_10 Plastic biaxial bending interaction.axs

Thema	Interaction check of simply supported beam under biaxial bending (EN 1993-1-1).
Analysis Type	Steel Design
Geometry	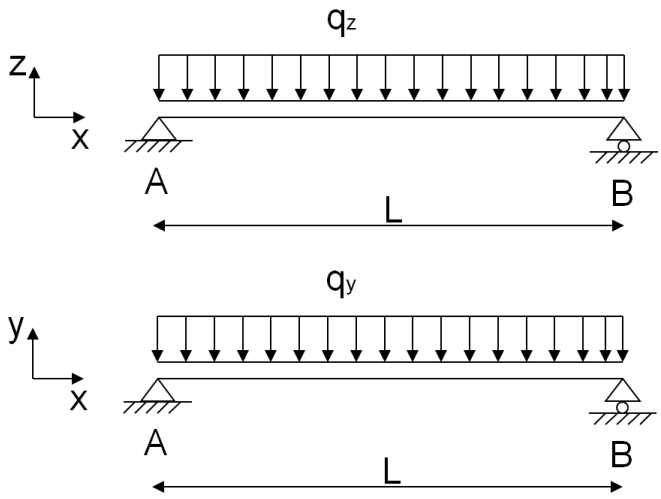 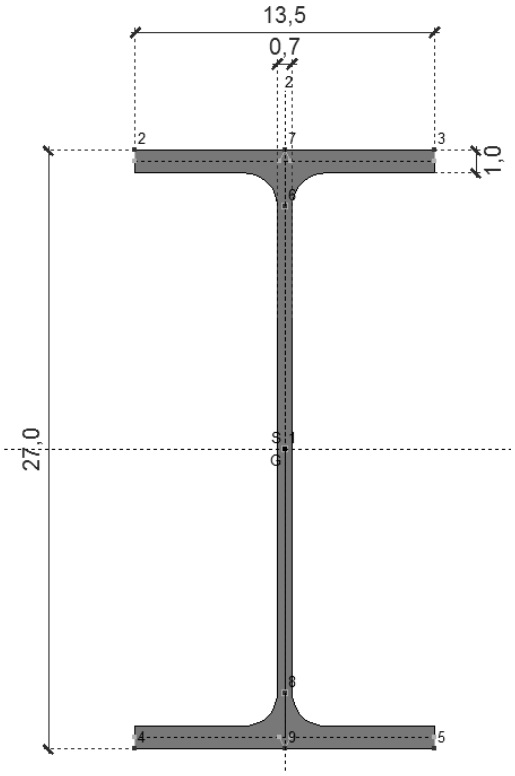 h = 270 mm b = 135 mm t_f = 10 mm t_w = 7 mm l = 6000 mm A = 45,95 cm^2 $W_{y,pl}$ = 484,1 cm^3 $W_{z,pl}$ = 97 cm^3 IPE270 cross section
Loads	q_y = 1,5 kN/m q_z = 20,4 kN/m
Boundary Conditions	eX = eY = eZ = 0 at A eY = eZ = 0 at B
Material Properties	S 235 E = 21000 kN/cm^2 ν = 0,3

Element types	Beam element
Target	Interaction check taking into account plastic resistances
Results	Analytical solution in the following book: Dunai, L., Horváth, L., Kovács, N., Verőci, B., Vigh, L. G.: “Acélszerkezetek méretezése az Eurocode 3 alapján, Gyakorlati útmutató” (Design of steel structures according to Eurocode 3,) Magyar Mérnöki Kamara Tartószerkezeti tagozata, Budapest, 2009. Exercise 3.10., page 28.

	Analitical solution	AxisVM	e[%]
$M_{y,Ed}$ [kNm]	91.8	91.8	-
$M_{z,Ed}$ [kNm]	6.75	6.75	-
$M_{pl,y,Rd}$ [kNm]	113.74	113.74	0.00
$M_{pl,z,Rd}$ [kNm]	22.78	22.78	0.00
α	2	2	-
β	1	1	-
capacity ratio [-]	0.948	0.948	0.00

Software Release Number: X7r1a
Date: 20. 02. 2023.
Tested by: InterCAD
File name: 3_12 _MNV_Interaction.axs

Thema	Interaction check of simply supported beam under normal force, bending and shear force. (EN 1993-1-1, EN 1993-1-5)
Analysis Type	Steel Design
Geometry	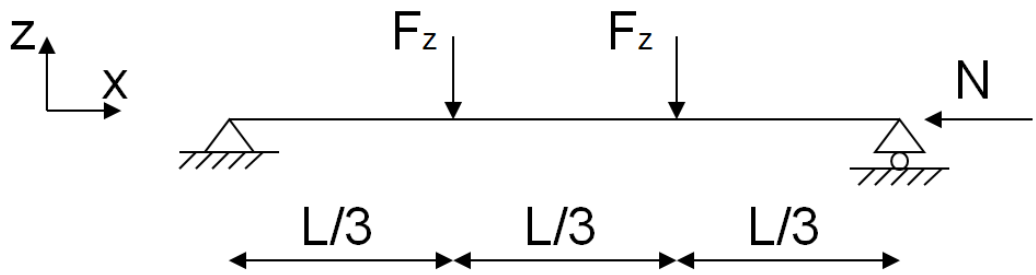 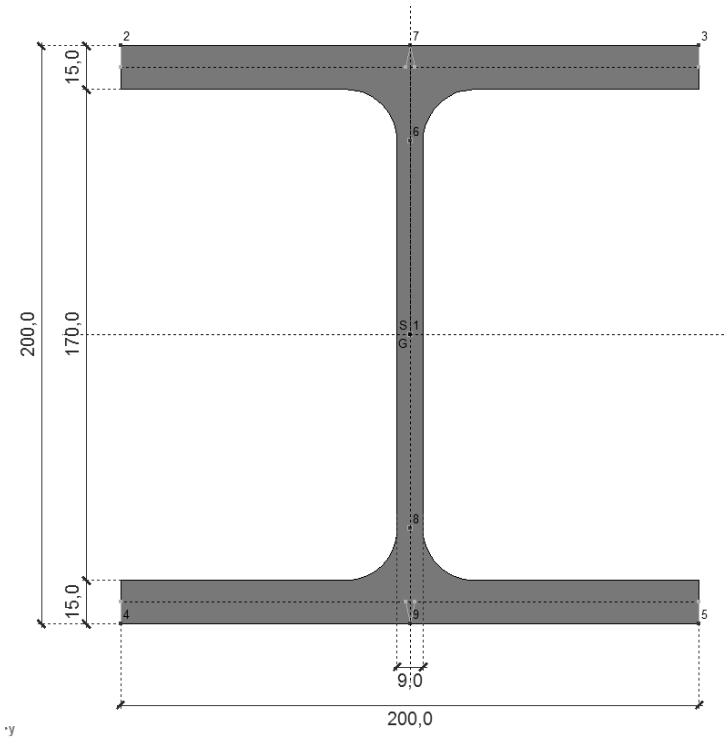 h = 200 mm b = 200 mm t_f = 15 mm t_w = 9 mm l = 1400 mm A = 78,1 cm^2 A_v = 24,83 cm^2 I_y = 5696 cm^3 $W_{y,pl}$ = 643 cm^3 HEB 200 cross section
Loads	F_z = 300 kN at thirds of beam N = 500 kN at B
Boundary Conditions	eX = eY = eZ = fiX = 0 at A eY = eZ = fiX =0 at B
Material Properties	S 235 E = 21000 kN/cm^2 ν = 0,3
Element types	Beam element
Target	Interaction check of axial force, shear force and bending moment.

Results	Analytical solution in the following book: Dunai, L., Horváth, L., Kovács, N., Verőci, B., Vigh, L. G.: “Acélszerkezetek méretezése az Eurocode 3 alapján, Gyakorlati útmutató” (Design of steel structures according to Eurocode 3,) Magyar Mérnöki Kamara Tartószerkezeti tagozata, Budapest, 2009. Exercise 3.12., page 31-33.

	Analytical solution	AxisVM results	e[%]
N_{Ed} [kN]	500	500	-
$V_{z,Ed}$ [kN]	300	300	-
$M_{y,Ed}$ [kNm]	140	140	-
Pure compression			
$N_{pl,Rd}$ [kN]	2148	2147.6	~0
capacity ratio [-]	0.233	0.233	-
Pure shear			
$V_{pl,z,Rd}$ [kN]	394.2	394.5	~0
capacity ratio [-]	0.761	0.761	-
Pure bending			
$M_{pl,y,Rd}$ [kNm]	176.8	176.7	~0
capacity ratio [-]	0.792	0.792	-
Interaction check			
ρ	0.273	0.2715	~0
$M_{V,Rd}$ [kNm]	163.96	163.9	~0
n	0.233	0.233	-
a	0.232	0.23	~0
$M_{NV,Rd}$ [kNm]	142.2	142.2	~0
capacity ratio [-]	0.985	0.984	~0

Software Release Number: X7r1a
Date: 20. 02. 2023.
Tested by: InterCAD
File name: 3_15 Központosan nyomott rúd - I szelvény.axs

Thema	Buckling resistance of simply supported beam (EN 1993-1-1).
Analysis Type	Steel Design
Geometry	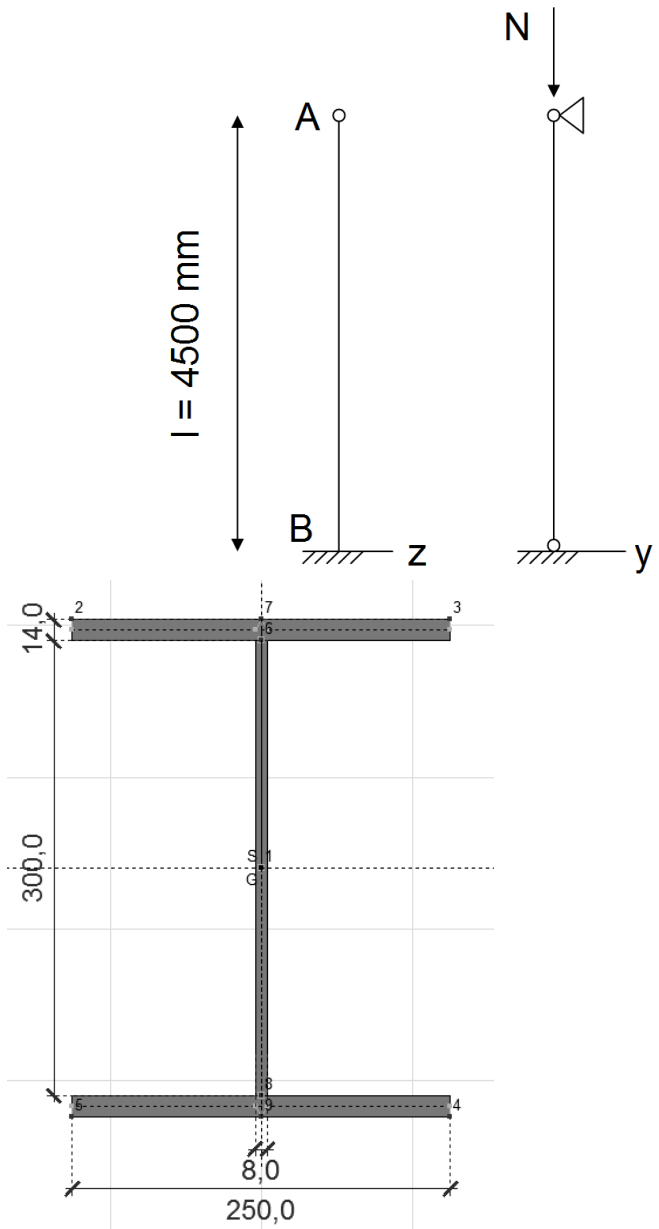 "I" cross section, symmetric about y and z axis h = 300 mm b = 250 mm t_f = 14 mm t_w = 8 mm l = 4500 mm A = 94 cm^2 I_y = 19065,8cm^4 I_z = 3647,1 cm^4 i_y = 14,1 cm i_z = 6,2 cm
Loads	Normal force at point A N_A= -1,0 kN
Boundary Conditions	eY = 0 at A eX = eY = eZ = fiX = fiZ= 0 at B $k_z = k_w = 1$
Material Properties	S 235 E = 21000 kN / cm^2 ν = 0,3
Element types	Beam element
Target	Buckling resistance $N_{b,Rd}$ = ?

Results	Analytical solution in the following book: Dunai, L., Horváth, L., Kovács, N., Verőci, B., Vigh, L. G.: “Acélszerkezetek méretezése az Eurocode 3 alapján, Gyakorlati útmutató” (Design of steel structures according to Eurocode 3,) Magyar Mérnöki Kamara Tartószerkezeti tagozata, Budapest, 2009. Exercise 3.15., P. 37-39.

	Analytical solution	AxisVM	e[%]
$\bar{\lambda}_y$ [-]	0.673	0.673	~0
$\bar{\lambda}_z$ [-]	0.771	0.769	~0
X_y [-]	0.8004	0.7988	~0
X_z [-]	0.6810	0.6815	~0
$N_{b,Rd}$ [kN]	1504.3	1505.3	~0

Software Release Number: X7r1a
Date: 20. 02. 2023.
Tested by: InterCAD
File name: 3_21 Központosan nyomott rúd - T szelvény.axs

Thema	Buckling resistance of simply supported beam (EN 1993-1-1).
Analysis Type	Steel Design
Geometry	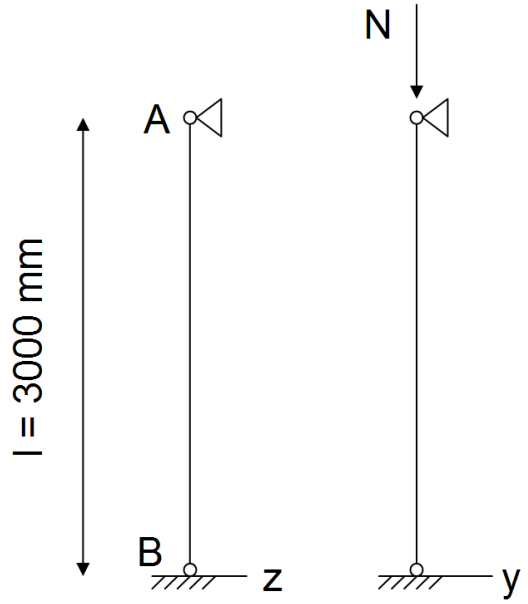 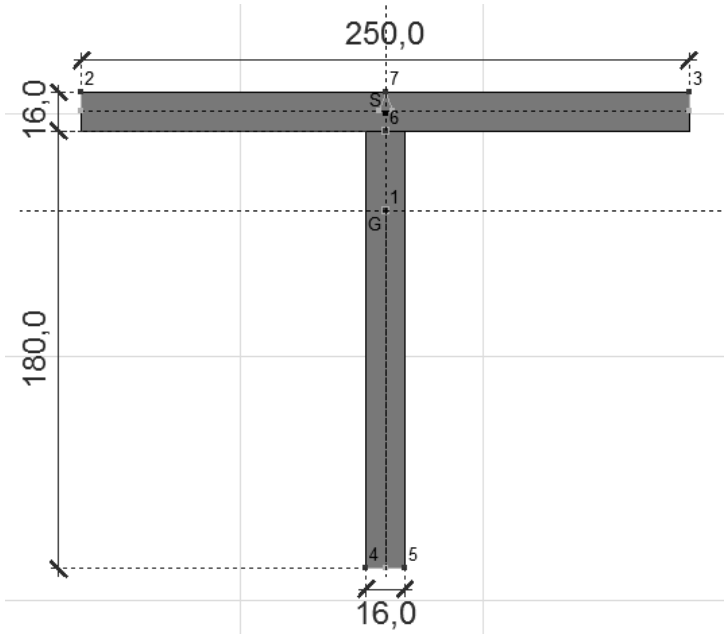 h = 180 mm b = 250 mm t_f = 16 mm t_w = 16 mm l = 3000 mm A = 68,8 cm^2 I_y = 2394,25cm^4 I_z = 2089,48 cm^4 I_{cs}= 58,71 cm^4 I_w = 1108,0 cm^6 i_y = 5,90 cm i_z = 5,51 cm Welded “T” section, symmetric to z but not y
Loads	Normal force at point A N_A= -1,0 kN
Boundary Conditions	eZ = eY = 0 at A eX = eY = eZ = fiX = 0 at B $k_z = k_w = 1$
Material Properties	S 235 E = 21000 kN/cm^2 ν = 0,3
Element types	Beam element
Target	Buckling resistance $N_{b,Rd}$ = ?

Results	Analytical solution in the following book: Dunai, L., Horváth, L., Kovács, N., Verőci, B., Vigh, L. G.: “Acélszerkezetek méretezése az Eurocode 3 alapján, Gyakorlati útmutató” (Design of steel structures according to Eurocode 3,) Magyar Mérnöki Kamara Tartószerkezeti tagozata, Budapest, 2009. Exercise 3.21., P. 47-49.

	Analitical solution	AxisVM	e[%]
z_s [cm]	49.0	49.0	-
z_w [cm]	4.10	4.03	-1.71
i_w [cm] *	9.05	9.03	-0.22
$\bar{\lambda}_y$ [-]	0.542	0.542	-
X_y [-]	0.8204	0.8195	-0.11
$N_{b,Rd,1}$ [kN]	1326,4	1325,0	-0.11
$\bar{\lambda}_{TF}$ [-] *	0.667	0.667	-
X_{TF} [-]	0.7432	0.7446	+0.19
$N_{b,Rd,2}$ [kN]	1201.6	1203.9	+0.19

* hidden partial results, Axis does not show them among the steel design results

Software Release Number: X7r1a
Date: 20. 02. 2023.
Tested by: InterCAD
File name: Külpontosan nyomott rúd - RHS szelvény.axs

Topic	Buckling of a hollow cross-section beam (EN 1993-1-1).
Analysis Type	Steel Design
Geometry	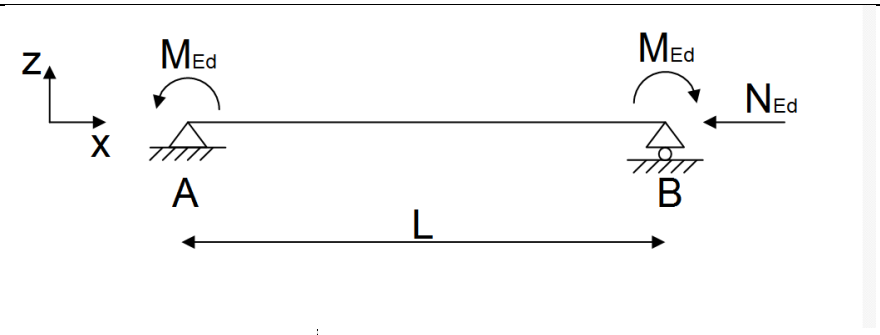 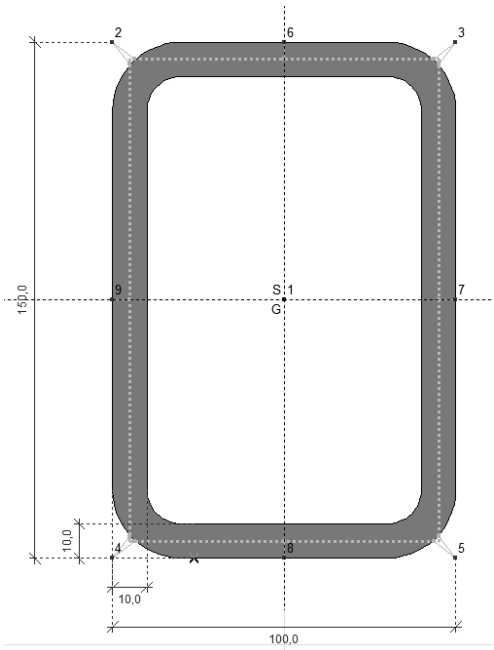 RHS 150x100x10,0 cross section (hot rolled) h = 150 mm b = 100 mm t_f = 10 mm t_w = 10 mm L = 4,000 m A = 43,41 cm^2 I_y = 1209,8 cm^4 I_z = 635,7 cm^4 i_y = 52,8 mm i_z = 38,3 mm $W_{el,y}$ = 161,3 cm^3 $W_{el,z}$ = 127,1 cm^3 $W_{pl,y}$ = 205,6 cm^3 $W_{pl,z}$ = 154,6 cm^3
Loads	Bending moment at both ends of beam and axial force $N_{Ed,C}$ = 200 kN $M_{Ed,A}$ = $M_{Ed,B}$ = 20 kNm
Boundary Conditions	eX = eY = eZ = 0, warping free at A eY = eZ = 0, warping free at B
Material Properties	S 275 E = 21000 kN / cm^2 ν = 0,3
Element types	Beam element
Steel Design Parameters	Buckling length: L_y = L L_z = L L_w = L
Target	Check for interaction of compression and bending.

Results	Analytical solution: Section class: 1. <u>Compression – flexural buckling</u> $N_{cr,y} = \frac{\pi^2 E I_y}{K_y L} = \frac{\pi^2 21000 \cdot 1209,8}{400^2} = 1567,2\,kN$ $N_{cr,z} = \frac{\pi^2 E I_z}{K_z L} = \frac{\pi^2 21000 \cdot 635,7}{400^2} = 823,5\,kN$ $N_{pl,Rd} = A \cdot f_y = 43,41 \cdot 27,5 = 1193,8\,kN$ $\bar{\lambda}_y = \sqrt{\frac{N_{pl}}{N_{cry}}} = \sqrt{\frac{1193,8}{1567,16}} = 0,8728$ $\bar{\lambda}_z = \sqrt{\frac{N_{pl}}{N_{crz}}} = \sqrt{\frac{1193,8}{823,48}} = 1,2040$ imperfection factor based on buckling curve “a” (hot rolled RHS section): $\alpha_y = \alpha_z = 0,21$ $\phi = \frac{1 + \alpha \cdot (\bar{\lambda} - 0.2) + \bar{\lambda}^2}{2}$ $\chi := \frac{1}{\phi + \sqrt{\phi^2 - \bar{\lambda}^2}}$ $\chi_y = 0,7516$ $\chi_z = 0,5275$ $N_{b,Rd} = \frac{\chi_y A f_y}{\gamma_1} = \frac{0,5275 \cdot 43,41\,cm^2 \cdot 27,5\,kN/cm^2}{1,0} = 629,72\,kN > N_{Ed,x} = 200\,kN$ <u>Bending – lateral torsional buckling</u> $M_{pl,Rd,y} = \frac{W_{pl,y} f_y}{\gamma_1} = \frac{205,6\ cm^3 \cdot 27,5\,kN/cm^2}{1,0} = 56,54\,kNm > M_{Ed} = 10\,kNm$ $C_1 = 1,000 \qquad k_z = k_w = 1$ $M_{cr} = C_1 \frac{\pi^2 E I_z}{(kL)^2} \sqrt{\left(\frac{k_z}{k_w}\right)^2 \frac{I_w}{I_z} + \frac{(kL)^2 G I_t}{\pi^2 E I_z}} =$ $M_{cr} = 1,0 \cdot \frac{\pi^2 21000 \frac{kN}{cm^2} \cdot 635,7\,cm^4}{(400\,cm)^2} \sqrt{\frac{766\,cm^6}{635,7\,cm^4} + \frac{(400\,cm)^2 \cdot 8077 \frac{kN}{cm^2} \cdot 1436,2\,cm^4}{\pi^2 \cdot 21000 \frac{kN}{cm^2} \cdot 635,7\,cm^4}}$ $M_{cr} = 977,41\,kNm$ $\bar{\lambda}_{LT} = \sqrt{\frac{W_y f_y}{M_{cr}}} = \sqrt{\frac{205,6\,cm^3 \cdot 27,5\,kN/cm^2}{977,41\,kNm}} = 0,2405$

$\bar{\lambda}_{LT} > 0{,}2$ → torsional buckling may occur

$$\alpha_{LT} = 0{,}76$$

$$\phi = \frac{1 + \alpha_{LT}(\bar{\lambda}_{LT} - 0.2) + \bar{\lambda}_{LT}^{2}}{2} = 0{,}5443$$

$$\chi_{LT} := \frac{1}{\phi + \sqrt{\phi^2 - \bar{\lambda}_{LT}^{2}}} = 0{,}9684$$

$$M_{b,Rd} = \chi_{LT} \cdot M_{pl,Rd,y} = 0{,}9684 \cdot 56{,}54 kNm = 54{,}76 kNm$$

<u>Interaction of bending and buckling</u>

$$N_{Rk} = A \cdot f_y = 43{,}41\,cm^2 \cdot 27{,}5\,kN/cm^2 = 1193{,}8\,kN$$

$$M_{y,Rk} = M_{pl,Rd,y} = 56{,}54 kNm$$

Equivalent uniform moment factors according to EN 1993-1-1 Annex B, Table B.3.:

$$\phi = 1{,}0$$

$$C_{my} = 0{,}6 + 0{,}4\phi = 1{,}0 > 0{,}4$$

For members susceptible to torsional deformations the interaction factors may be calculated according to EN 1993-1-1 Annex B, Table B.2.:

$$k_{yy} = C_{my}\left\{1 + (\bar{\lambda}_{LT} - 0{,}2)\frac{N_{Ed}}{\chi_y N_{Rk}/\gamma_{M1}}\right\} < C_{my}\left\{1 + 0{,}8\frac{N_{Ed}}{\chi_y N_{Rk}/\gamma_{M1}}\right\}$$

$$k_{yy} = 1{,}0\left\{1 + (0{,}87 - 0{,}2)\cdot\frac{200}{0{,}7531 \cdot 1193{,}78/1{,}0}\right\} < 1{,}0\left\{1 + 0{,}8\cdot\frac{200}{0{,}7531 \cdot 1193{,}78/1{,}0}\right\}$$

$$k_{yy} = \min(1{,}149; 1{,}178) = 1{,}149$$

$$k_{zy} = \left\{1 - \frac{0{,}1 \cdot \bar{\lambda}_z}{C_{mLT} - 0{,}25}\cdot\frac{N_{Ed,x}}{\chi_z N_{Rk}/\gamma_{M1}}\right\} \geq \left\{1 - \frac{0{,}1}{C_{mLT} - 0{,}25}\cdot\frac{N_{Ed,x}}{\chi_z N_{Rk}/\gamma_{M1}}\right\}$$

$$k_{zy} = \left\{1 - \frac{0{,}1 \cdot 1{,}2040}{1{,}0 - 0{,}25}\cdot\frac{200}{0{,}5275 \cdot 1193{,}78/1{,}0}\right\} \geq \left\{1 - \frac{0{,}1}{1{,}0 - 0{,}25}\cdot\frac{200}{0{,}5275 \cdot 1193{,}78/1{,}0}\right\}$$

$$k_{zy} = \max(0{,}9490; 0{,}9577) = 0{,}9577$$

$$\frac{N_{Ed}}{\chi_y \cdot N_{Rk}/\gamma_{M1}} + k_{yy}\frac{M_{y,Ed}}{\chi_y \cdot M_{y,Rk}/\gamma_{M1}} =$$

$$= \frac{200}{0{,}7516 \cdot 1193{,}78} + 1{,}149 \cdot \frac{20}{0{,}9684 \cdot 56{,}54} = 0{,}6426$$

$$\frac{N_{Ed}}{\chi_z \cdot N_{Rk}/\gamma_{M1}} + k_{zy}\frac{M_{y,Ed}}{M_{y,Rk}/\gamma_{M1}} =$$

$$= \frac{200}{0{,}5275 \cdot 1193{,}78} + 0{,}9577 \cdot \frac{20}{0{,}9684 \cdot 56{,}54} = 0{,}6674$$

	Analytical solution	AxisVM	e [%]
$N_{Rk} = N_{pl,Rd}$ [kN]	1193.8	1193.9	~0
$\bar{\lambda}_y$ [-]	0.873	0.873	~0
$\bar{\lambda}_z$ [-]	1.204	1.205	~0
X_y [-]	0.7516	0.7513	~0
X_z [-]	0.5275	0.5271	~0
$N_{b,Rd}$ [kN]	629.7	629.23	-0.10
$M_{c,Rd} = M_{pl,Rd}$ [kNm]	56.54	56.54	-
C_1	1.000	1.000	-
M_{cr} [kNm]	977.41	977.4	~0
$\bar{\lambda}_{LT}$ [-]	0.2405	0.2405	-
X_{LT} [-]	0.9684	1.000	-
$M_{b,Rd}$ [kNm]	54.76	56.54	+3.25
C_{my} [-]	1.0	1.0	-
k_{yy} [-]	1.149	1.150	~0
k_{zy} [-]	0.9577	0.69	-27.95*
Interaction capacity ratio 1 [-]	0.643	0.643	-
Interaction capacity ratio 2 [-]	0.667	0.562	-15.74*

*due to the difference in X_{LT} (see 6.3.2.2 and 6.3.2.3 of EN 1993-1-1)

Software Release Number: X7r1a
Date: 20. 02. 2023.
Tested by: InterCAD
File name: 3_26 Külpontosan nyomott rúd - I szelvény.axs

Thema	Lateral torsional buckling of a beam (EN 1993-1-1).
Analysis Type	Steel Design
Geometry	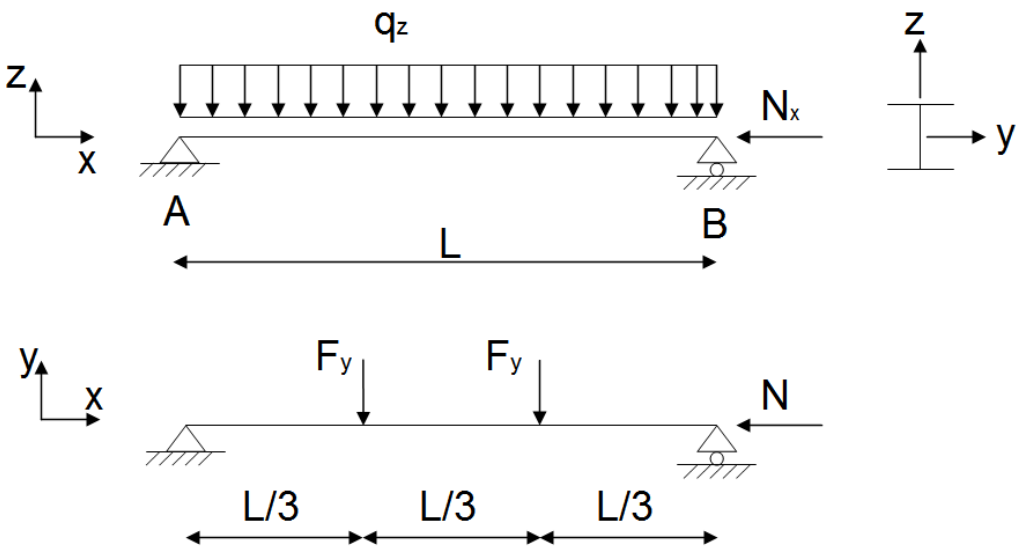 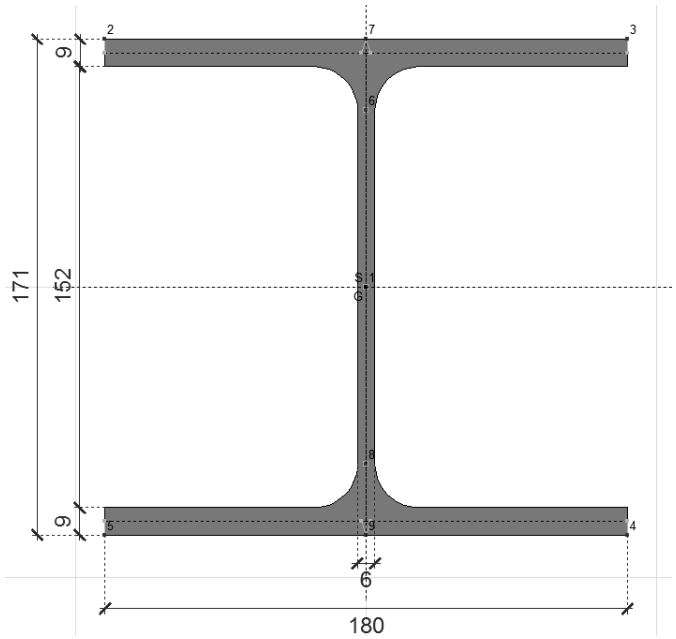 HEA180 h = 171 mm b = 180 mm t_f = 6 mm t_w = 9,5 mm L = 4,000 m A = 45,26 cm^2 I_y = 2510,7 cm^4 I_z = 924,6 cm^4 i_y = 74 mm i_z = 45 mm $W_{el,y}$ = 293,7 cm^3 $W_{el,z}$ = 102,7 cm^3 $W_{pl,y}$ = 324,9 cm^3 $W_{pl,z}$ = 156,5 cm^3 I_w = 58932 cm^6 I_t = 15 cm^4
Loads	Axial force at B: N_x = -280 kN Point load in y direction at the thirds of the beam: F_y = 5 kN Distributed load in z direction: q_z = 4,5 kN/m
Boundary Conditions	eX = eY = eZ = 0, warping free at A eY = eZ = 0, warping free at B
Material Properties	S 235 E = 21000 kN / cm^2 ν = 0,3
Element types	Beam element

Steel Design Parameters	The elastic critical load factor is: α_{cr} = 4,28 As α_{cr} = 4,28 < 15 → II. order analysis is required. For this, the beam element needs to be meshed. Divison of the beam element into 4. Buckling length: L_y = L L_z = L LT buckling length: L_w = L
Target	Buckling check for interaction of axial force and bi-axial bending.
Results	<u>Internal forces from the second order analysis</u> 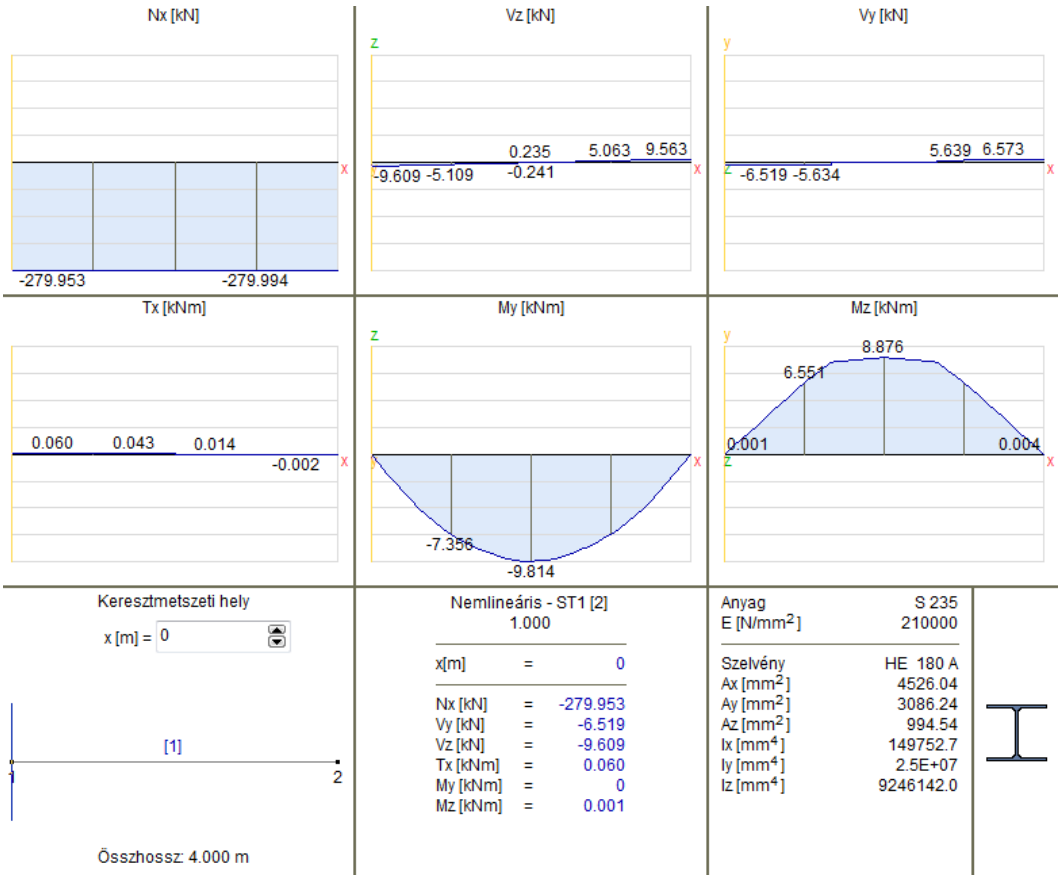 $N_{Ed,x}$ = 280 kN $M_{Ed,y}$ = 9,81 kNm $M_{Ed,z}$ = 8,88 kNm $V_{Ed,y}$ = 6,52 kN $V_{Ed,z}$ = 9,61 kN

Analytical solution:

Section class: 1.

Normal force

$$N_{cr,y} = \frac{\pi^2 E I_y}{K_y L} = \frac{\pi^2 21000 \cdot 2510,7}{400} = 3252,3\,kN$$

$$N_{cr,z} = \frac{\pi^2 E I_z}{K_z L} = \frac{\pi^2 21000 \cdot 924,6}{400} = 1197,7\,kN$$

$$N_{pl,Rd} = A \cdot f_y = 45,26 \cdot 23,5 = 1063,6\,kN$$

$$\bar{\lambda}_y = \sqrt{\frac{N_{pl}}{N_{cry}}} = \sqrt{\frac{1063,6}{3252,3}} = 0,5719$$

$$\bar{\lambda}_z = \sqrt{\frac{N_{pl}}{N_{crz}}} = \sqrt{\frac{1063,6}{1197,7}} = 0,9424$$

based on buckling curve “b” in y direction and “c” in z direction:

$$\chi_y = 0,8508$$

$$\chi_z = 0,5741$$

$$N_{b,Rd,1} = \frac{\chi_y A f_y}{\gamma_1} = \frac{0,8508 \cdot 45,26cm^2 \cdot 23,5kN/cm^2}{1,0} = 904,92\,kN > N_{Ed,x} = 280\,kN$$

$$N_{b,Rd,2} = \frac{\chi_z A f_y}{\gamma_1} = \frac{0,5741 \cdot 45,26cm^2 \cdot 23,5kN/cm^2}{1,0} = 610,62\,kN > N_{Ed,x} = 280\,kN$$

Bending

$$M_{pl,Rd,y} = \frac{W_{pl,y} f_y}{\gamma_1} = \frac{324,9\,cm^3 \cdot 23,5\,kN/cm^2}{1,0} = 76,35\,kNm > M_{Ed,y} = 9,81\,kNm$$

$$M_{pl,Rd,z} = \frac{W_{pl,z} f_y}{\gamma_1} = \frac{156,5\,cm^3 \cdot 23,5\,kN/cm^2}{1,0} = 36,78\,kNm > M_{Ed,z} = 8,88\,kNm$$

Calculation of the critical moment:

$C_1 = 1,132$ (due to the M_y moment diagram)

$$M_{cr} = C_1 \frac{\pi^2 E I_z}{(kL)^2} \sqrt{\left(\frac{k_z}{k_w}\right)^2 \frac{I_w}{I_z} + \frac{(kL)^2 G I_t}{\pi^2 E I_z}} =$$

$$M_{cr} = 1,132 \frac{\pi^2 21000\,kN/cm^2 \cdot 924,6\,cm^4}{(400\,cm)^2} \sqrt{\frac{58932\,cm^6}{924,6\,cm^4} + \frac{(400\,cm)^2 \cdot 8077\,kN/cm^2 \cdot 15\,cm^4}{\pi^2 \cdot 21000\,kN/cm^2 \cdot 924,6\,cm^4}}$$

$$M_{cr} = 174,1\,kNm$$

For rolled section, the following procedure may be used to determine the reduction factor (EN 1993-1-1,Paragraph 6.3.2.3.):

$$\bar{\lambda}_{LT} = \sqrt{\frac{W_y f_y}{M_{cr}}} = \sqrt{\frac{324{,}9\,cm^3 \cdot 23{,}5\,kN/cm^2}{174{,}10\,kNm}} = 0{,}6622$$

$$\phi = \frac{1 + \alpha_{LT}(\bar{\lambda}_{LT} - 0.4) + 0.75 \cdot \bar{\lambda}_{LT}^{\,2}}{2} = 0{,}7090$$

$$\chi_{LT} := \frac{1}{\phi + \sqrt{\phi^2 - 0.75 \cdot \bar{\lambda}_{LT}^{\,2}}} = 0{,}8881$$

$$M_{b,Rd} = \chi_{LT} \cdot M_{pl,Rd,y} = 0{,}8881 \cdot 76{,}35 kNm = 67{,}81 kNm$$

<u>Interaction of axial force and bi-axial bending</u>

$$N_{Rk} = N_{pl,Rd} = 1063{,}6\,kN$$

$$M_{y,Rk} = M_{pl,Rd,y} = 76{,}35\,kNm$$

$$M_{z,Rk} = M_{pl,Rd,z} = 36{,}78\,kNm$$

Equivalent uniform moment factors according to EN 1993-1-1 Annex B, Table B.3.:

$\psi = 0, \alpha = 0$ in both directions

$C_{my} = C_{mLT} = 0{,}95 + 0{,}05\alpha = 0{,}95$ (distributed load)

$C_{mz} = 0{,}90 + 0{,}10\alpha = 0{,}90$ (concentrated load)

$$k_{yy} = C_{my}\left\{1 + (\bar{\lambda}_y - 0{,}2)\frac{N_{Ed,x}}{\chi_y N_{Rk}/\gamma_{M1}}\right\} \le C_{my}\left\{1 + 0{,}8\frac{N_{Ed,x}}{\chi_y N_{Rk}/\gamma_{M1}}\right\}$$

$$k_{yy} = 0{,}95 \cdot \left\{1 + (0{,}5719 - 0{,}2) \cdot \frac{280}{0{,}8508 \cdot 1063{,}6/1{,}0}\right\} \le 0{,}95 \cdot \left\{1 + 0{,}8 \cdot \frac{280}{0{,}8508 \cdot 1063{,}6/1{,}0}\right\}$$

$$k_{yy} = \min(1{,}0593; 1{,}1851) = 1{,}0593$$

$$k_{zy} = \left\{1 - \frac{0{,}1 \cdot \bar{\lambda}_z}{C_{mLT} - 0{,}25} \cdot \frac{N_{Ed,x}}{\chi_z N_{Rk}/\gamma_{M1}}\right\} \ge \left\{1 - \frac{0{,}1}{C_{mLT} - 0{,}25} \cdot \frac{N_{Ed,x}}{\chi_z N_{Rk}/\gamma_{M1}}\right\}$$

$$k_{zy} = \left\{1 - \frac{0{,}1 \cdot 0{,}9424}{0{,}95 - 0{,}25} \cdot \frac{280}{0{,}5741 \cdot 1063{,}6/1{,}0}\right\} \ge \left\{1 - \frac{0{,}1}{0{,}95 - 0{,}25} \cdot \frac{280}{0{,}5741 \cdot 1063{,}6/1{,}0}\right\}$$

$$k_{zy} = \max(0{,}9383; 0{,}9345) = 0{,}9383$$

$$k_{zz} = C_{mz}\left\{1+(2\cdot\bar{\lambda}_z - 0{,}6)\frac{N_{Ed,x}}{\chi_z\, N_{Rk}/\gamma_{M1}}\right\} \le C_{mz}\left\{1+1{,}4\frac{N_{Ed,x}}{\chi_z\, N_{Rk}/\gamma_{M1}}\right\}$$

$$k_{zz} = 0{,}90\left\{1+(2\cdot 0{,}9424 - 0{,}6)\frac{280}{0{,}5741\cdot 1063{,}6/1{,}0}\right\} \le 0{,}90\left\{1+1{,}4\frac{280}{0{,}5741\cdot 1063{,}6/1{,}0}\right\}$$

$$k_{zz} = \min(1{,}4303; 1{,}478) = 1{,}4303$$

$$k_{yz} = 0{,}6\, k_{zz} = 0{,}8582$$

$$\frac{N_{Ed,x}}{\chi_y\cdot N_{Rk}/\gamma_{M1}} + k_{yy}\frac{M_{y,Ed}}{\chi_{LT}\cdot M_{y,Rk}/\gamma_{M1}} + k_{yz}\frac{M_{z,Ed}}{M_{z,Rk}/\gamma_{M1}} =$$

$$= \frac{280}{0{,}8508\cdot 1063{,}6} + 1{,}0593\cdot\frac{9{,}81}{0{,}8881\cdot 76{,}35} + 0{,}8582\cdot\frac{8{,}88}{36{,}78} = 0{,}6699$$

$$\frac{N_{Ed,x}}{\chi_z\cdot N_{Rk}/\gamma_{M1}} + k_{zy}\frac{M_{y,Ed}}{\chi_{LT}\cdot M_{y,Rk}/\gamma_{M1}} k_{zz}\frac{M_{z,Ed}}{M_{z,Rk}/\gamma_{M1}} =$$

$$= \frac{280}{0{,}5741\cdot 1063{,}6} + 0{,}9383\cdot\frac{9{,}81}{0{,}8881\cdot 76{,}35} + 1{,}4303\cdot\frac{8{,}88}{36{,}78} = 0{,}9396$$

	Analytical solution	AxisVM	e [%]
$N_{pl,Rd}$ [kN]	1063.6	1063.6	-
$N_{cr,y}$ [kN]	3252.3	3252.4	-
$N_{cr,z}$ [kN]	1197.7	1197.7	-
$\lambda_{y,\,rel}$ [-]	0.5719	0.5719	-
$\lambda_{z,\,rel}$ [-]	0.9424	0.9424	-
X_y [-]	0.8508	0.8509	-
X_z [-]	0.5741	0.5741	-
$M_{pl,Rd,y}$ [kNm]	76.35	76.34	~0
$M_{pl,Rd,z}$ [kNm]	36.78	36.78	~0
C_1 [-]	1.132	1.13	
M_{cr} [kNm]	174.1	172.99	-0.6
$\lambda_{LT,\,rel}$ [-]	0.6622	0.6643	+0.3
X_{LT} [-]	0.8881	0.8871	-0.1
$M_{b,Rd}$ [kNm]	67.81	67.72	-0.1
$C_{my} = C_{mLt}$ [-]	0.95	0.95	-
C_{mz} [-]	0.90	0.95	+5.5**
k_{yy}	1.0593	1.0593	-
k_{zz}	1.4303	1.5096	+5.5***
k_{yz}	0.8582	0.9058	+5.5***
k_{zy}	0.9383	0.9383	-
Interaction capacity ratio 1	0.6687	0.6801	+1.7***
Interaction capacity ratio 2	0.9374	0.9564	+2.0***

** See EC3 Annex B, Table B.3: the difference is due to the fact, that AxisVM calculates the equivalent uniform moment factor (C_{my}, C_{mz}, C_{mLT}) for both uniform load and concentrated load, and then takes the higher value. The effect on the final result (efficiency) is +1~2%.

*** the difference is due to the different C_{mz} value

Software Release Number: X7r1a
Date: 20. 02. 2023.
Tested by: InterCAD
File name: Double-symmetric I - Class 4.axs

Thema	Interaction check of beam in section class 4 (EN 1993-1-1, EN 1993-1-5)
Analysis Type	Steel Design
Geometry	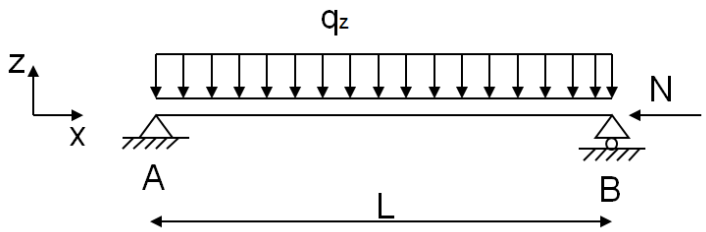 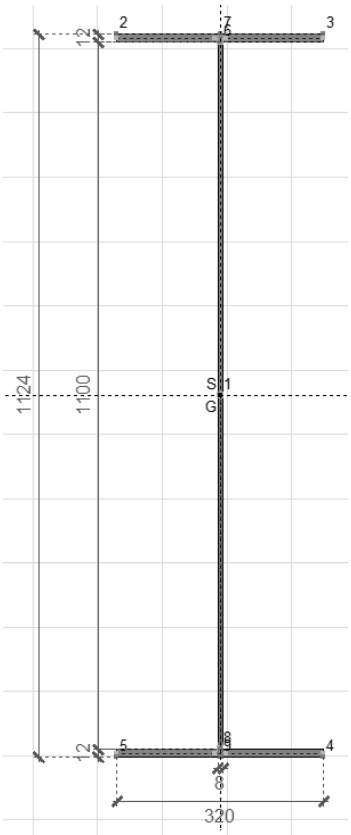 h = 1124 mm t_w = 8 mm b = 320 mm t_f = 12 mm L = 8,000 m A = 164,8 cm^2 I_y = 326159,4 cm^4 $W_{el,y}$ = 5803,6 cm^3 Double-symmetric welded I shape
Loads	Axial force at B: $N_{Ed,C}$ = 700 kN Distributed load in z direction: q_z = 162,5 kNm The internal forces in the mid-section: $M_{Ed,y}$ = 1300 kNm, $N_{Ed,x}$ = - 700 kN
Boundary Conditions	eX = eY = eZ = fiX = 0 at A eY = eZ = fiX = 0 at B
Material Properties	S 355 E = 21000 kN / cm^2 ε=0,81 ν = 0,3
Element types	Beam element
Target	Check the strength capacity ratios for axial force, bending and interaction.

Results

Analytical solution in the following book:

Dunai, L., Horváth, L., Kovács, N., Verőci, B., Vigh, L. G.: “Acélszerkezetek méretezése az Eurocode 3 alapján, Gyakorlati útmutató” (Design of steel structures according to Eurocode 3,) Magyar Mérnöki Kamara Tartószerkezeti tagozata, Budapest, 2009.
Exercise 3.4., P. 14-16.
Exercise 3.6., P. 19-21.
Exercise 3.13., P. 34.

	Analytical solution	AxisVM	e [%]
Uniform compression			
$k_{\sigma,flange}\,[-]$	0.43	0.43	-
$\bar{\lambda}_{p,flange}[-]$	0.831	0.858	+3.1
$\rho_{flange}[-]$	0.931	0.910	-2.3
$b_{eff,f}[cm]$	140.0	142.0	+1.4
$k_{\sigma,web}[-]$	4	4	-
$\bar{\lambda}_{p,web}[-]$	2.957	2.975	+0.6
$\rho_{web}[-]$	0.313	0.311	-0.6
$b_{eff,web}[cm]$	340.8	342.4	+0.5
$\mathbf{A_{eff}[cm^2]}$	**99.98**	**97.46**	**-2.6**
$\mathbf{N_{eff}[kN/cm^2]}$ [kN]	**3549**	**3460**	**+2.6**
capacity ratio: N	**0.2**	**0.2**	**-**
Uniform bending			
$k_{\sigma,flange}[-]$	0.43	0.43	-
$\bar{\lambda}_{p,flange}[-]$	0.831	0.858	+3.1
$\rho_{flange}[-]$	0.931	0.910	-2.3
$b_{eff,f}[cm]$	139.95	142.0	+1.4
$\Psi\,[-]$	-0.969	-0.959	+1.0
$k_{\sigma,web}\,[-]$	23.09	22.84	-1.1
$\bar{\lambda}_{p,web}\,[-]$	1.231	1.245	+1.1
$\rho_{web}\,[-]$	0.739	0.731	-1.1
$b_{eff,web}\,[cm]$	408.6	410.4	+0.4
$\mathbf{W_{eff,y,min}[cm^3]}$	**5131**	**4976**	**-3.1**
$\mathbf{M_{y,eff,Rd}\,[kNm]}$	**1821.5**	**1766.5**	**-3.1**
capacity ratio: M	**0.71**	**0.74**	**+4.1**
$\boldsymbol{capacity\ ratio: N-M\ interaction}$	**0.91**	**0.94**	**+3.3**

Small differences occur because AxisVM does not take into account welding when calculating the effective section sizes.

Software Release Number: X7r1a
Date: 20. 02. 2023.
Tested by: InterCAD
Reference: Jean-Marc Franssen, Paulo Villa Real: Fire Design of Steel Structures (Example 5.3)
File name: steel_fire.axs

Thema	Fire design of steel elements – Unprotected column under axial compression (EN 1993-1-2)
Analysis Type	Steel Design
Geometry	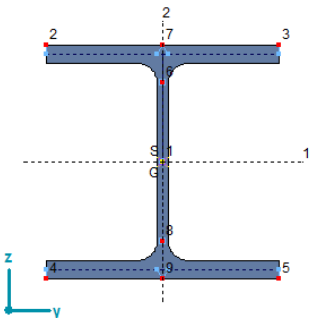 Length: L = 3.5m Section: HE180B Buckling length coeff. Ky = Kz = 0.5
Loads	Axial force at A: $N_{fi,Ed}$ = 495 kN R30 (ISO fire) required fire resistance
Boundary Conditions	eX = eY = eZ = fiZ = 0 at B eX = eY = 0 at A
Material Properties	S275 E = 21000 kN / cm^2 ν = 0,3
Element types	Beam element

Results

	Analytical solution	AxisVM	e [%]
θ [°C]	766	767	+0.1
θ_{cr} [°C]	623	633	+1.6
k_{sh} [-]	0.624	0.624	-
A/V [1/m]	159	158.9	-
$\chi_{z,fi}$ [-]	0.714	0.715	+0.1
$N_{b,fi,Rd}$ [kN]	193	191	-1.0

Software Release Number: X7r1a
Date: 20. 02. 2023.
Tested by: InterCAD
Reference: Jean-Marc Franssen, Paulo Villa Real: Fire Design of Steel Structures (Example 5.6)
File name: steel_fire.axs

Thema	Fire design of steel elements – Unrestrained beam (EN 1993-1-2)
Analysis Type	Steel Design
Geometry	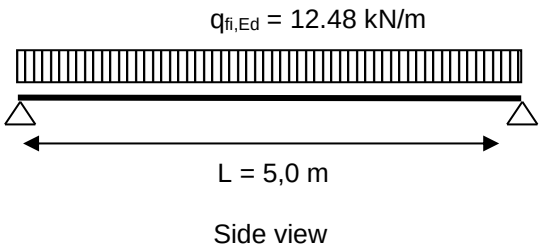 Section: IPE 300 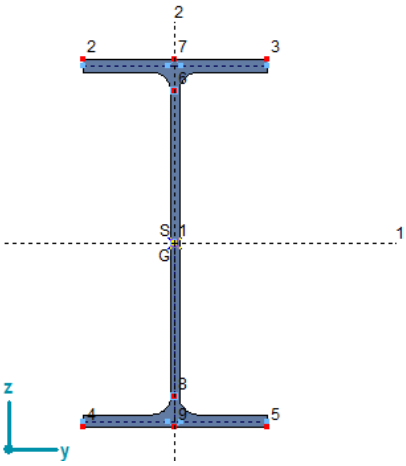
Loads	Distributed load: $q_{fi,Ed}$ = 12.48 kN/m
Boundary Conditions	eX = eY = eZ = fiX = 0 at A eY = eZ = fiX = 0 at B
Material Properties	S 235 E = 21000 kN / cm^2 ν = 0,3
Element types	Beam element
Target	Evaluate the critical temperature.

Results

	Analytical solution	AxisVM	e [%]
θ_{cr} [°C]	519	519	-
$\bar{\lambda}_{LT,\theta}$ [1/m]	1.222	1.219	-0.2
$\chi_{LT,fi}$ [-]	0.364	0.366	+0.5
$M_{b,fi,Rd}$ [kNm]	38.8	38.9	+0.2

Software Release Number: X7r1a
Date: 01. 03. 2023.
Tested by: InterCAD
Reference: Jean-Marc Franssen, Paulo Villa Real: Fire Design of Steel Structures (Example 5.7)
File name: steel_fire.axs

Thema	Fire design of steel elements – Unrestrained beam-column (EN 1993-1-2)
Analysis Type	Steel Design
Geometry	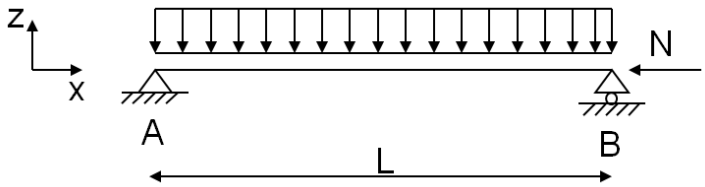 Length: L= 6.0m Section IPE 450 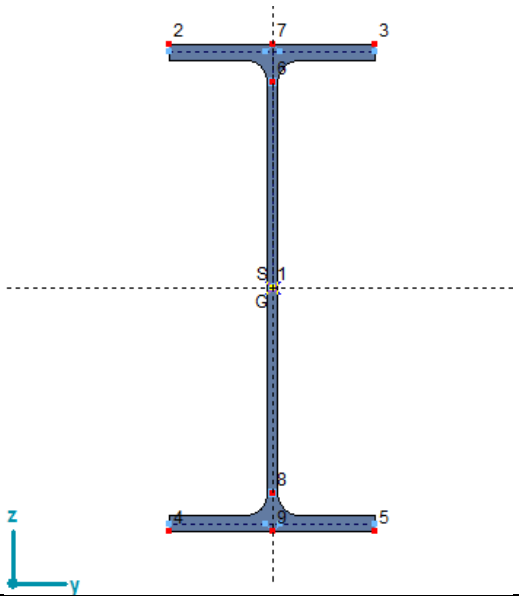
Loads	Axial force at B: $N_{fi,Ed}$ = 136.5 kN Distributed load: $q_{fi,Ed}$ = 15.89 kN/m
Boundary Conditions	eX = eY = eZ = fix = 0 at A eY = eZ = fix = 0 at B
Material Properties	S 235 E = 21000 kN / cm^2 ν = 0,3
Element types	Beam element
Target	Evaluate the critical temperature.

Results

	Analytical solution	AxisVM	e [%]
θ_{cr} [°C] (no LTB)	595	589	-1.0
θ_{cr} [°C]	515	509	-1.2

Software Release Number: X7r1a
Date: 01. 03. 2023.
Tested by: InterCAD
Reference: Jean-Marc Franssen, Paulo Villa Real: Fire Design of Steel Structures (Example 5.8)
File name: steel_fire.axs

Thema	Fire design of steel elements – Beam-column with restrained lateral displacements (EN 1993-1-2)
Analysis Type	Steel Design
Geometry	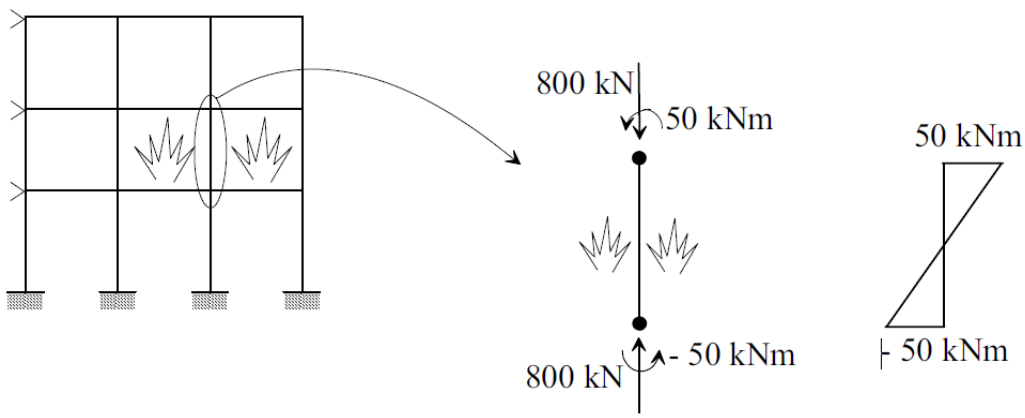 (*Jean-Marc Franssen, Paulo Villa Real: Fire Design of Steel Structures*) Length: L= 3.0m Section HE 200B
Loads	Axial force: $N_{fi,Ed}$ = 800 kN Bending moment: $M_{y,fi,Ed}$ = +/-50 kNm
Boundary Conditions	eX = eY = eZ = fiZ = 0 at B eX = eY = 0 at A
Material Properties	S 235 E = 21000 kN / cm² ν = 0,3
Element types	Beam element

Results

	Analytical solution	AxisVM	e [%]
θ_{cr} [°C] (with buckling)	552	553	+0.2
k_y [-]	0.374	0.35	-6.4
$\chi_{y,fi}$ [-]	0.871	0.8704	-0.07
$V_{pl,fi,Rd}$ [kN]	208.2	208.3	+0.05
$N_{pl,fi,Rd}$ [kN]	1134	1134.1	~0.0
θ_{cr} [°C] (without buckling; M+N)	516	517	+0.2

Software Release Number: X7r1a
Date: 01. 03. 2023.
Tested by: InterCAD
Reference: Eurocodes: Background & Applications Structural Fire Design
File name: timber_fire_1.axs

Thema	Fire design of timber elements – Unprotected beam (EN 1995-1-2)
Analysis Type	Timber Design
Geometry	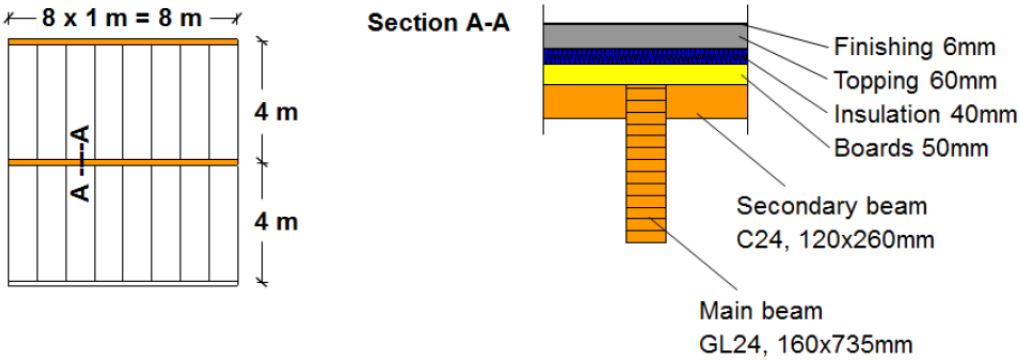 Length: L = 8m Section: 160x735
Loads	distributed load: $q_{d,fi}$ = 14.76 kN/m R30 required fire resistance
Boundary Conditions	eX = eY = eZ = 0 at B eY = eZ = fiX = 0 at A
Material Properties	GL24h E = 1150 kN / cm^2 ν = 0,2
Element types	Beam element

Results

	Analytical solution	AxisVM	e [%]
d_{ef} [mm]	28	28	0.0
$\sigma_{m,y,d,fi}$ [N/mm^2]	13.6	13.6	0.0
$f_{m,y,d,fi}$ [N/mm^2]	27.6	27.6	0.0

Software Release Number: X7r1a
Date: 01. 03. 2023.
Tested by: InterCAD
Reference: Eurocodes: Background & Applications Structural Fire Design
File name: timber_fire_2.axs

Thema	Fire design of timber elements – Unprotected column (EN 1995-1-2)
Analysis Type	Timber Design
Geometry	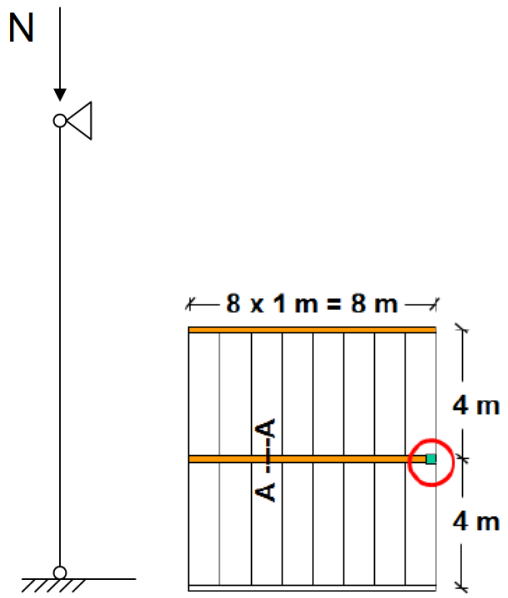
Loads	Concentrated load on the top: $N_{d,fi}$ = 59 kN R30 required fire resistance
Boundary Conditions	eX = eY = eZ = fiZ = 0 at the bottom eX = eY = 0 at the top
Material Properties	C24 E = 1100 kN / cm^2 ν = 0,2
Element types	Beam element

Results

	Analytical solution	AxisVM	e [%]
d_{ef} [mm]	31	31	0.0
$k_{c,fi}$ [-]	0.27	0.27	0.0
η [-]	0.86	0.85	-1.0

Software Release Number: X7r1a
Date: 01. 03. 2023.
Tested by: InterCAD
Reference: Eurocodes: Background & Applications Structural Fire Design
File name: timber_fire_2.axs

Thema	Fire design of timber elements – Protected column (EN 1995-1-2)
Analysis Type	Timber Design
Geometry	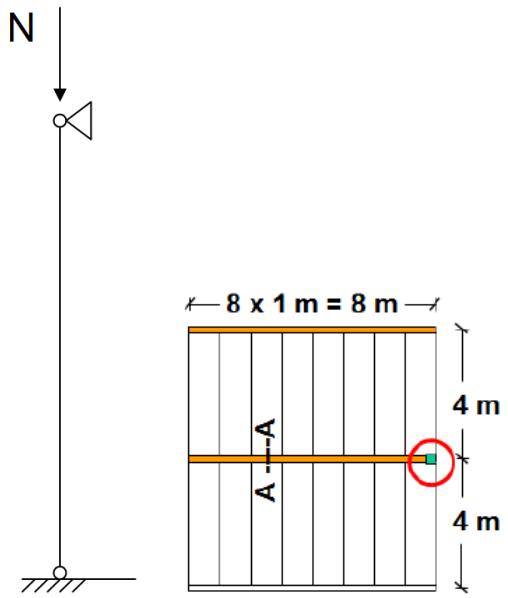
Loads	Concentrated load on the top: $N_{d,fi}$ = 59 kN R60 required fire resistance; protection: 18 mm gypsum board, $t_a = t_{ch}$ = 36 min
Boundary Conditions	eX = eY = eZ = fiZ = 0 at the bottom eX = eY = 0 at the top
Material Properties	C24 E = 1100 kN / cm^2 ν = 0,2
Element types	Beam element

Results

	Analytical solution	AxisVM	e [%]
d_{ef} [mm]	38.8	38.8	0.0
$k_{c,fi}$ [-]	0.2	0.2	0.0
η [-]	1.64	1.66	+1.0

Software Release Number: X7r1a
Date: 01. 03. 2023.
Tested by: InterCAD
File name: Earthquake-01-EC.axs

Thema	Earth-quake design using response-spectrum method.
Analysis Type	Linear frequency analysis with 5 modes. Linear static analysis.
Geometry	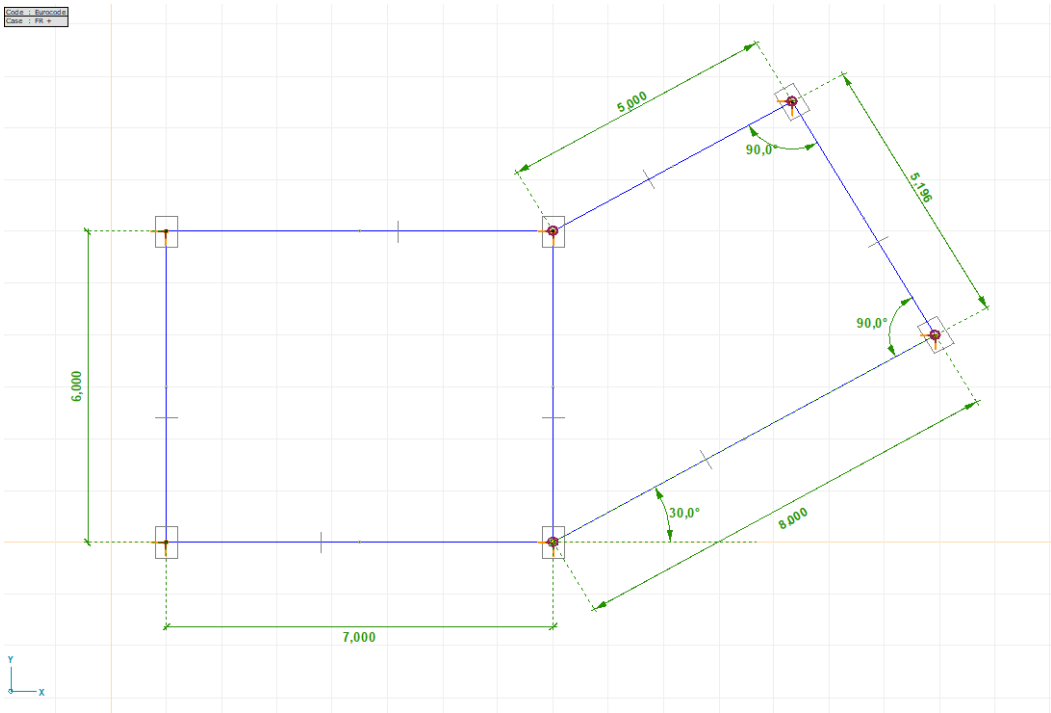 Top view 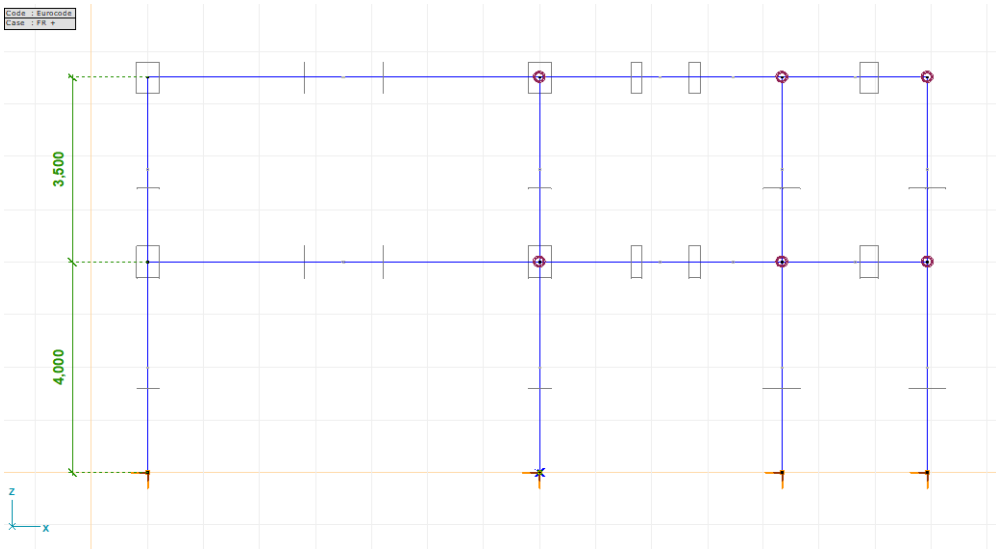 Front view

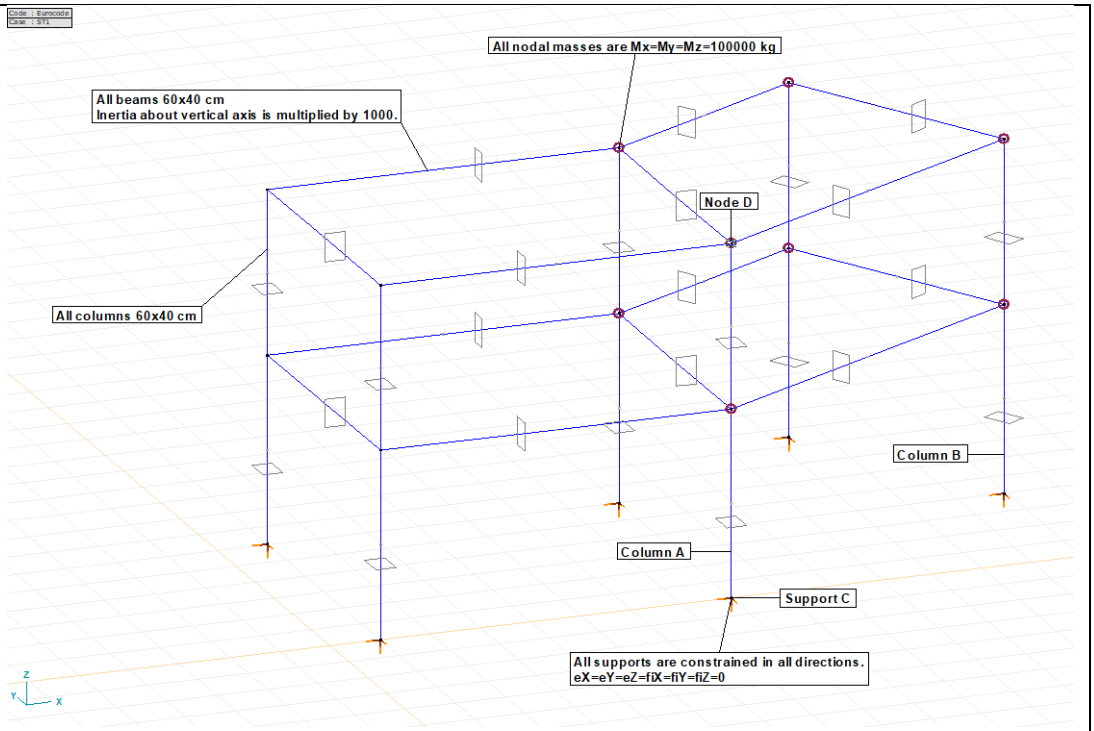

Perspective view

Section beams: 60x40 cm
Ax=2400 cm2 Ay=2000 cm2 Az=2000 cm2
Ix=751200 cm4 Iy=720000 cm2 Iz=320000000 cm4

Section columns: 60x40 cm
Ax=2400 cm2 Ay=2000 cm2 Az=2000 cm2
Ix=751200 cm4 Iy=720000 cm2 Iz=320000 cm4

Loads

Nodal masses on eight nodes. Mx=My=Mz=100000 kg
Model self-weight is excluded.
$q_d = 1$
Spectrum for X and Y direction of seismic action:

	T[s]	S_d
1	0	1,150
2	0,2000	2,156
3	0,6000	2,156
4	1,3000	0,995
5	3,0000	0,300
6	4,0000	0,300
	. . .	. . .

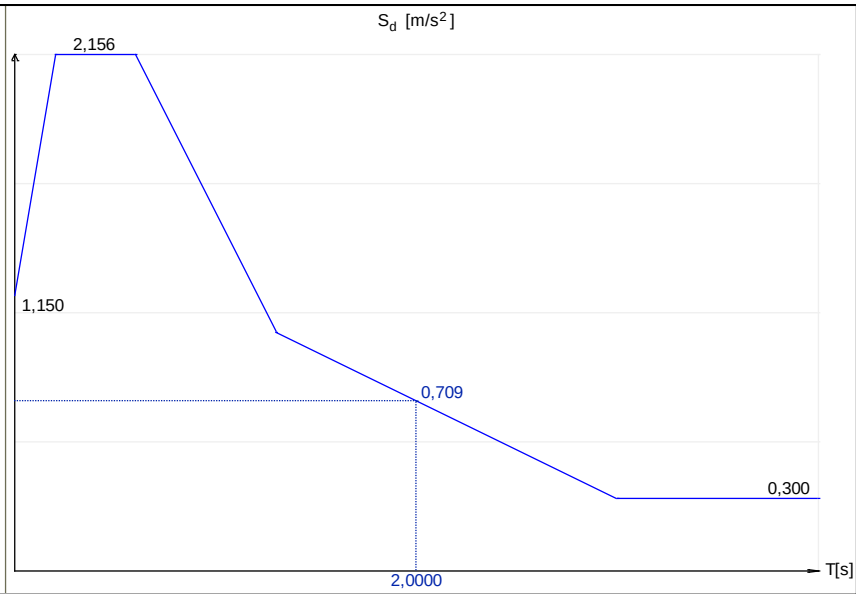

Boundary Conditions

Nodes at the columns bottom ends are constrained in all directions.
eX=eY=eZ=fiX=fiY=fiZ=0

Material Properties

C25/30
E=3050 kN/cm2 ν =0,2 ρ = 0

Element types	Rib element: Three node straight prismatic beam element. Shear deformation is taken into account.
Target	Compare the model results with SAP2000 v6.13 results. The results are combined for all modes and all direction of spectral acceleration. CQC combination are used for modes in each direction of acceleration. SRSS combination are used for combination of directions.
Results	

Period times of first 5 modes

Mode	T[s] SAP2000	T[s] AxisVM	Difference [%]
1	0,7450	0,7450	0
2	0,7099	0,7098	+0,01
3	0,3601	0,3601	0
4	0,2314	0,2314	0
5	0,2054	0,2053	+0,05

Modal participating mass ratios in X and Y directions

Mode	εX SAP2000	εX AxisVM	Difference %	εY SAP2000	εY AxisVM	Difference %
1	0,5719	0,5723	+0,07	0,3153	0,3151	-0,06
2	0,3650	0,3647	-0,08	0,4761	0,4764	+0,06
3	0	0	0	0,1261	0,1261	0
4	0,0460	0,0461	+0,22	0,0131	0,0131	0
5	0,0170	0,0170	0	0,0562	0,0561	0
Summ	**1,0000**	**1,0000**	**0**	**0,9868**	**0,9868**	**0**

Internal forces at the bottom end of Column A and Column B

	Column A SAP2000	Column A AxisVM	Difference %	Column B SAP2000	Column B AxisVM	Difference %
Nx [kN]	315,11	315,15	-0,013	557,26	557,29	-0,005
Vy [kN]	280,34	280,34	0	232,88	232,88	0
Vz [kN]	253,49	253,49	0	412,04	412,04	0
Tx [kNm]	34,42	34,41	-0,032	34,47	34,46	-0,029
My [kNm]	625,13	625,12	-0,002	1038,74	1038,73	-0,001
Mz [kNm]	612,31	612,31	0	553,41	553,41	0

Support forces of Support C

	Support C SAP2000	Support C AxisVM	Difference %
Rx [kN]	280,34	280,34	0
Ry [kN]	253,49	253,49	0
Rz [kN]	315,11	315,15	-0,013
Rxx [kNm]	625,13	625,12	-0,002
Ryy [kNm]	612,31	612,31	0
Rzz [kNm]	34,42	34,41	+0,029

Displacements of Node D

	Node D SAP2000	Node D AxisVM	Difference %
eX [mm]	33,521	33,521	0
eY [mm]	19,944	19,945	-0,005
eZ [mm]	0,229	0,229	0
φX [rad]	0,00133	0,00133	0
φY [rad]	0,00106	0,00106	0
φZ [rad]	0,00257	0,00257	0

Normal forces:

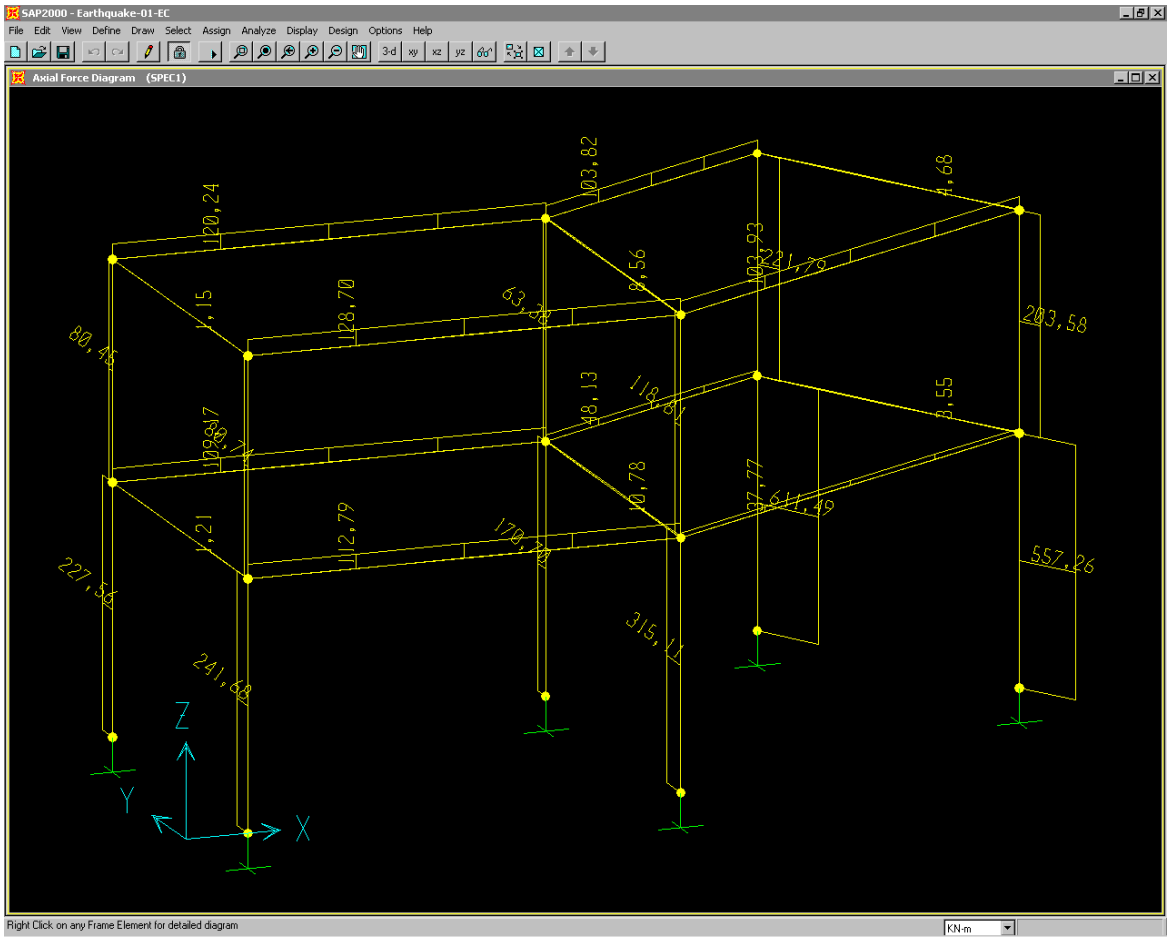

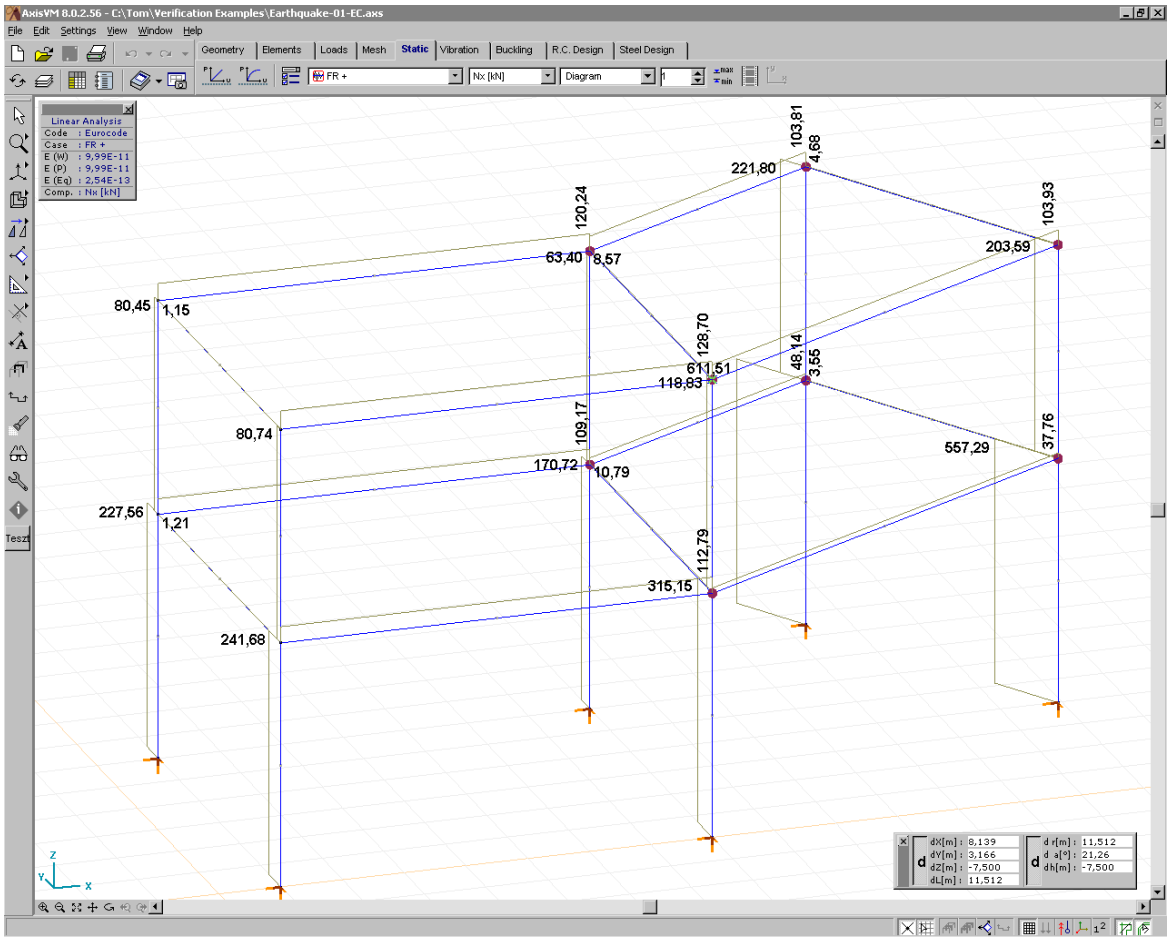

Bending moments:

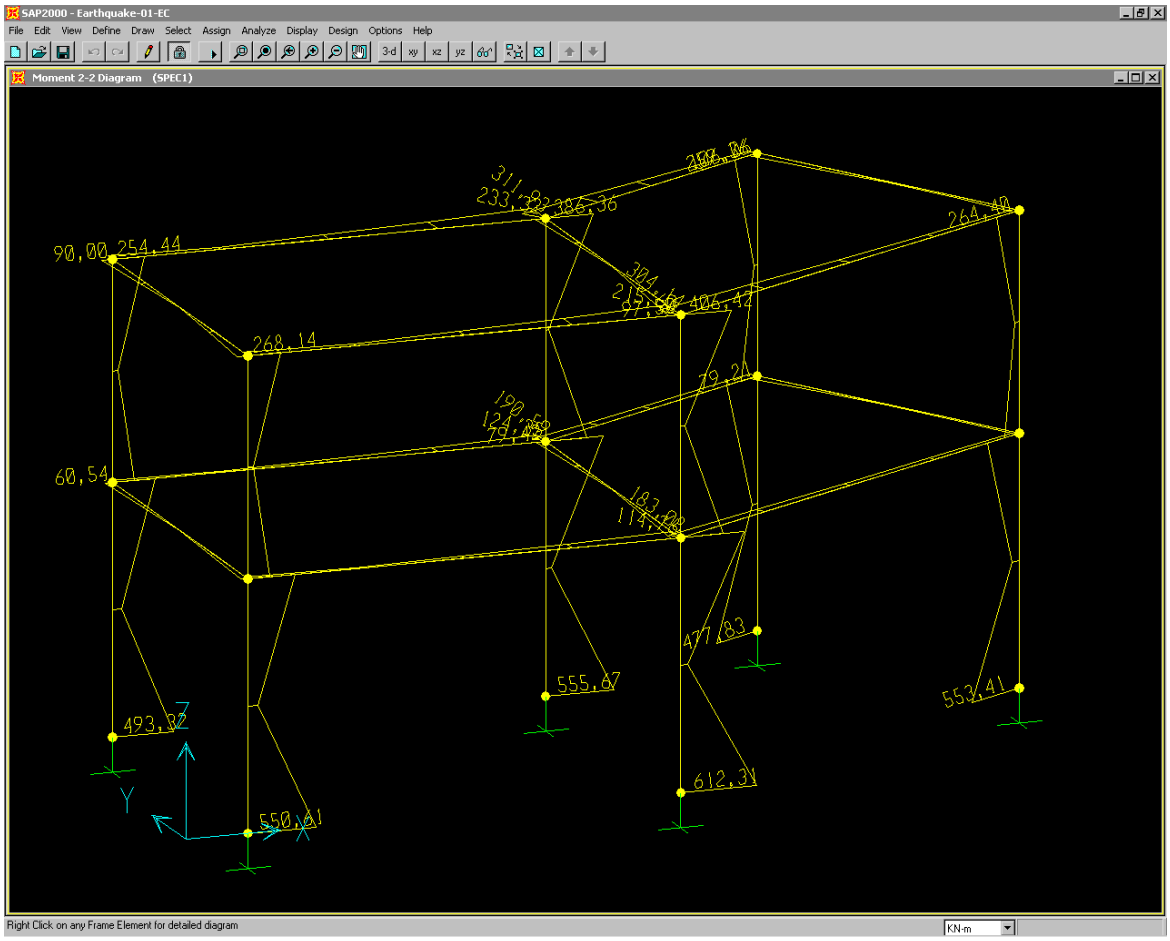

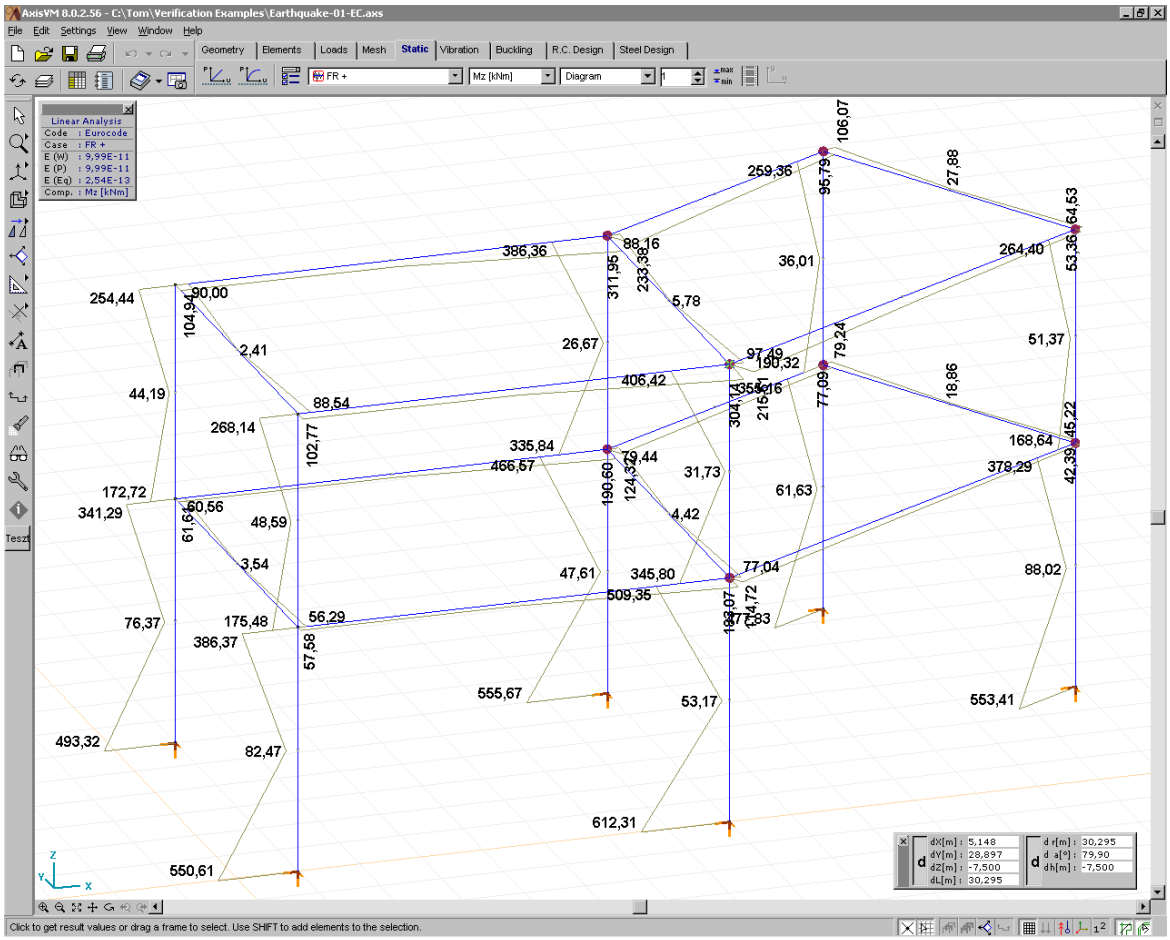

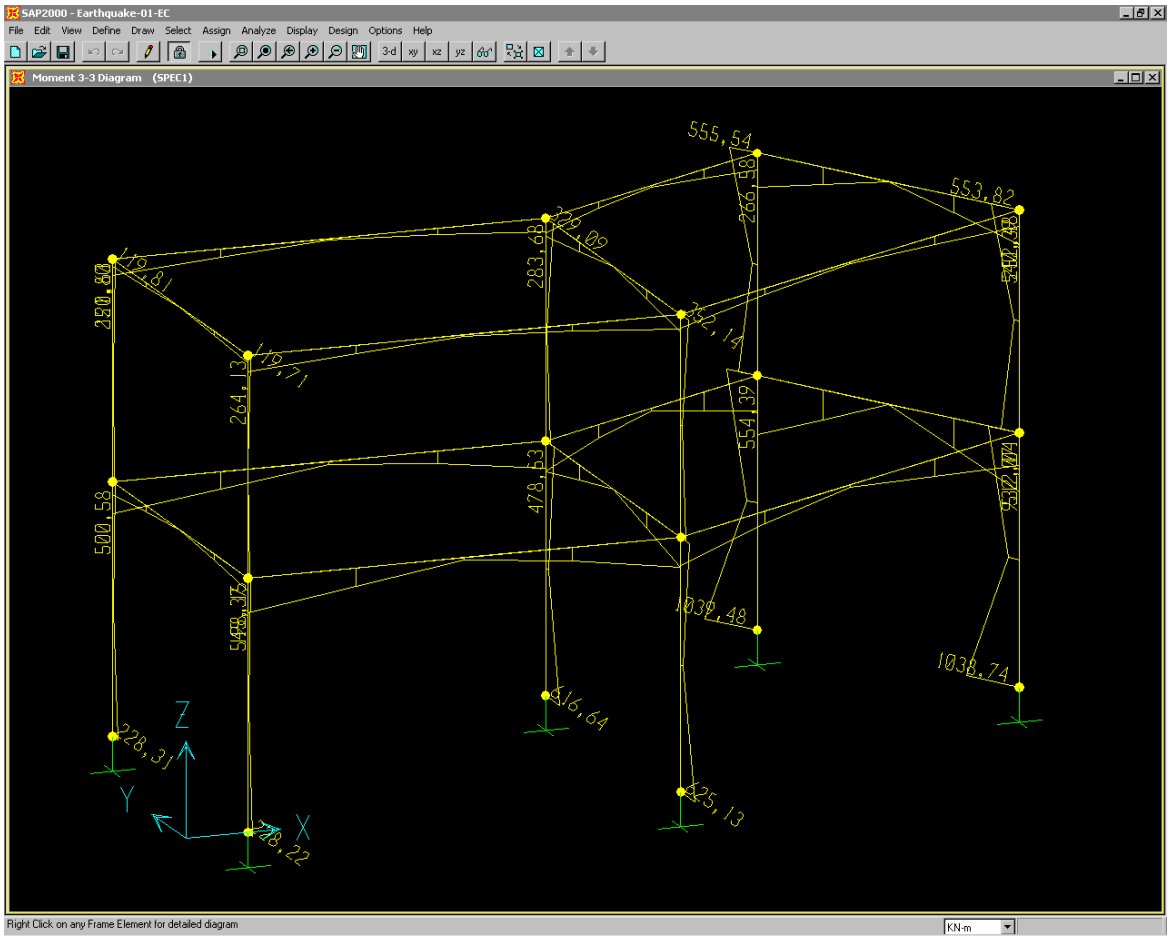
SAP2000 - Earthquake-01-EC
File Edit View Define Draw Select Assign Analyze Display Design Options Help
Moment 3-3 Diagram (SPEC1)
555,54
553,82
283,68
329,09
119,81
120,63
264,13
119,71
500,58
478,53
554,39
1038,48
1038,74
616,64
228,31
425,13
228,22
Z
Y
X
Right Click on any Frame Element for detailed diagram
KN-m

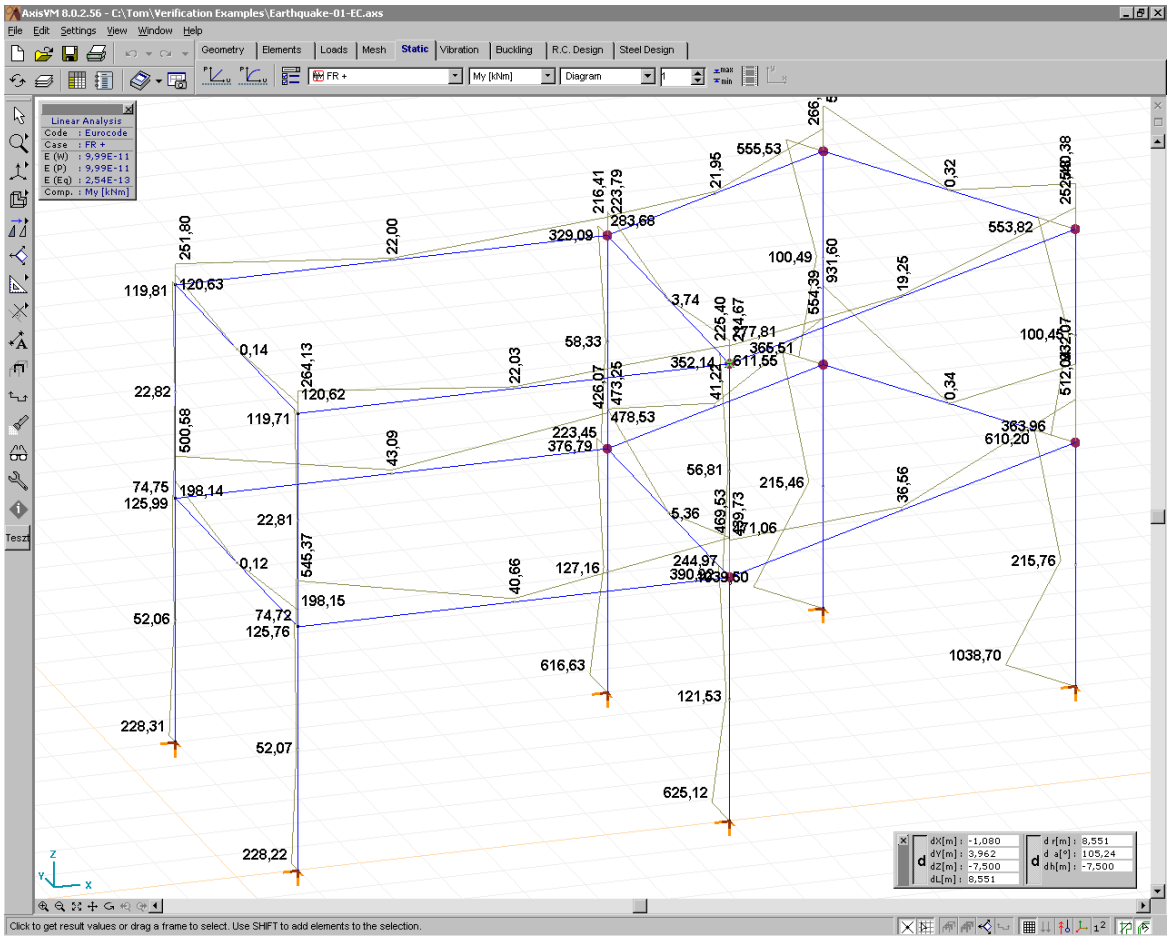
AxisVM 8.0.2.56 - C:\Tom\Verification Examples\Earthquake-01-EC.axs
File Edit Settings View Window Help
Geometry Elements Loads Mesh Static Vibration Buckling R.C. Design Steel Design
FR +
My [kNm]
Diagram
Linear Analysis
Code : Eurocode
Case : FR +
E (W) : 9,99E-11
E (P) : 9,99E-11
E (Eq) : 2,54E-13
Comp. : My [kNm]
555,53
553,82
329,09
283,68
119,81
120,63
264,13
119,71
500,58
478,53
554,39
931,60
1038,70
616,63
228,31
625,12
228,22
Click to get result values or drag a frame to select. Use SHIFT to add elements to the selection.

Displacements:

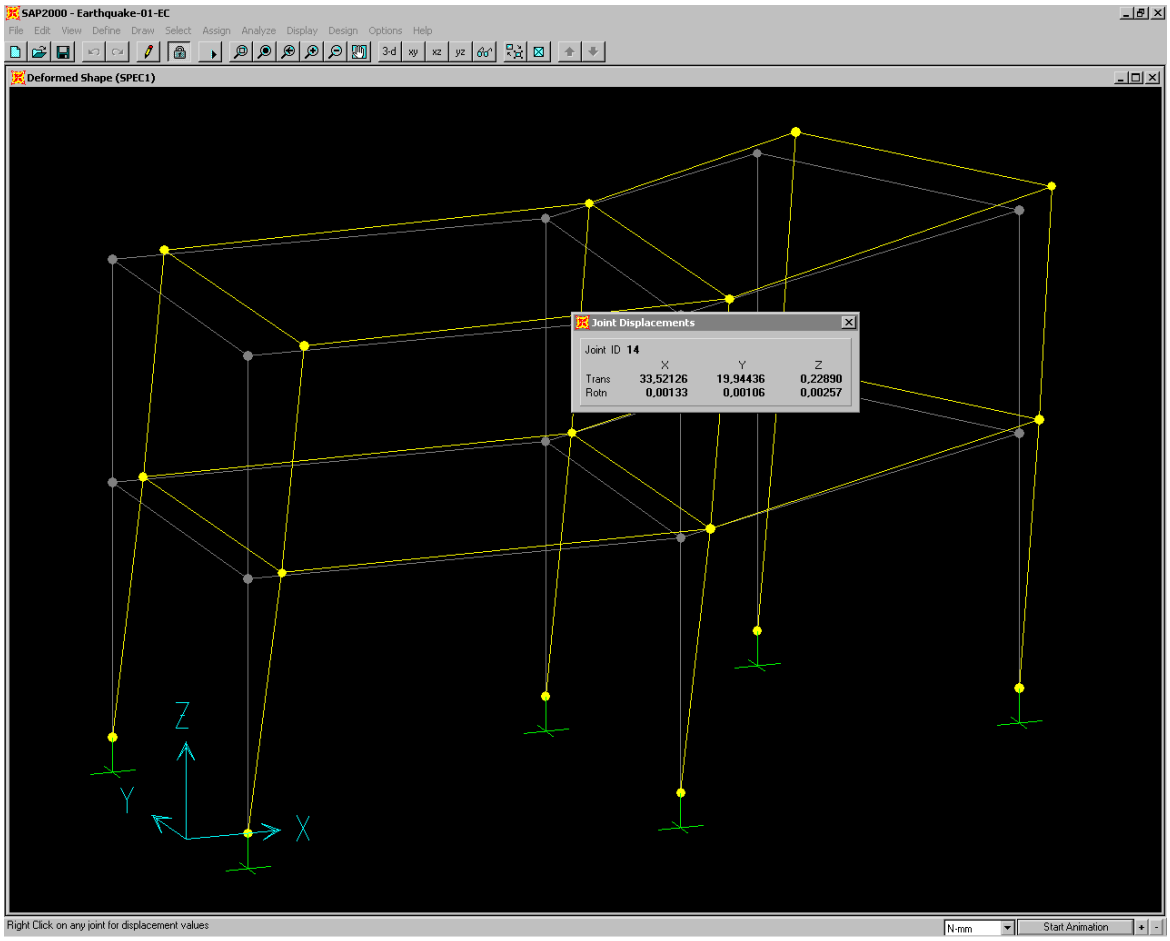

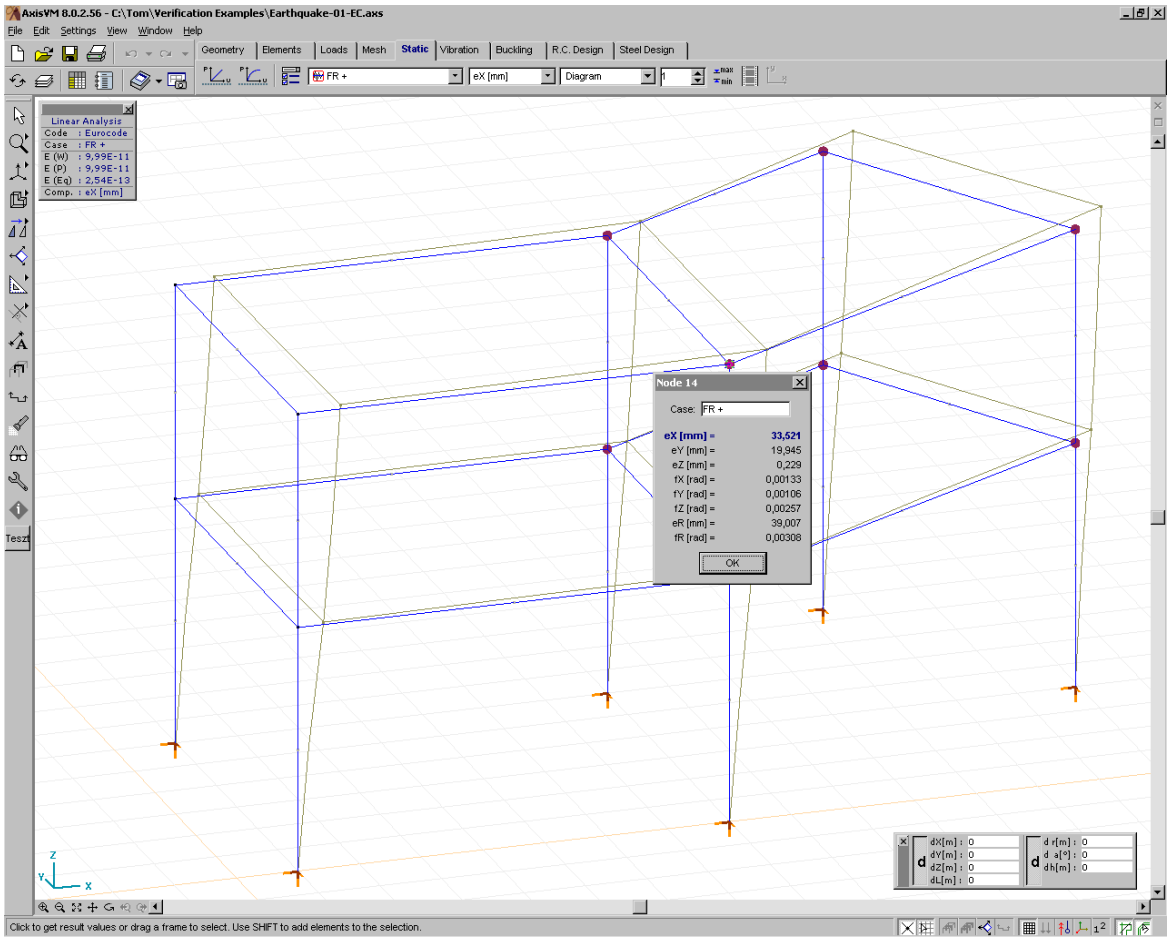

Appendix A

Date: 07. 02. 2018.
Tested by: InterCAD

Thema	Clamped beam with *symmetrical nonlinear* material model – Theoretical background
Geometry	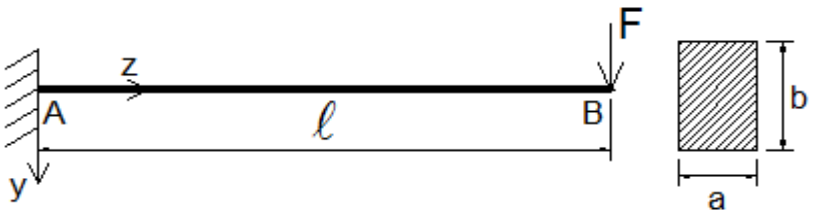
References	S. Kaliszky Mechanika II. Tankönyvkiadó, Budapest, 1990
Equations	Material function: $$\sigma = C \cdot \varepsilon^n \quad (1)$$ Moment of inertia: $$J_{n+1} = a \int_{-b/2}^{b/2} y^{n+1} dy \quad (2)$$ Second-order linear differential equation for elastic curve: $$\frac{d^2 v}{dz^2} = -\left(\frac{M}{C J_{n+1}}\right)^{1/n} \quad (3)$$ Bending moment: $$M(z) = F(l - z) \quad (4)$$ Boundary conditions: $$z = 0, \frac{dy}{dz} = 0; \quad (5)$$ $$z = 0; y = 0 \quad (6)$$ Deflection equation based on previous equations ($n = 1/2$): $$y = \frac{F^2 \left(\frac{l^2 z^2}{2} - \frac{l z^3}{6} + \frac{z^4}{12}\right)}{(C J_{n+1})^{1/n}} \quad (7)$$

Software Release Number: X4r3
Date: 07. 02. 2018.
Tested by: InterCAD

Thema	Clamped beam with a*symmetrical nonlinear* material model – Theoretical background
Geometry	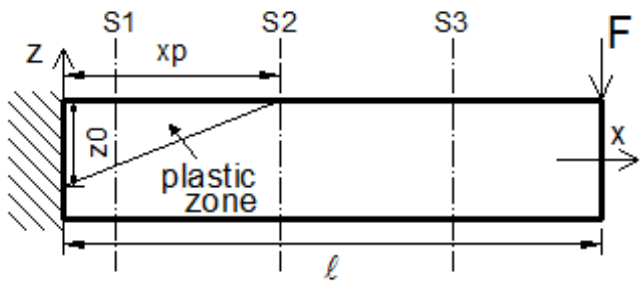
Stress distribution	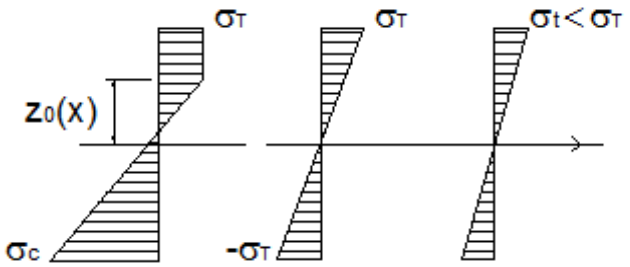
Equations	**In the nonlinear zone (S1 section)**

$$\sigma(x,z) = \begin{cases} \sigma_T & \text{if } z_0(x) < z \\ \sigma_T - E\kappa(x)\big(z - z_0(x)\big) & \text{if } z < z_0(x) \end{cases} \tag{1}$$

The normal force and the moment equations of equilibrium are given by

$$0 = \sigma_T h v - \int_{-\frac{h}{2}}^{z_0} E\kappa(x)\big(z - z_0(x)\big) v dz \tag{2}$$

$$F(\ell - x) = -\int_{-\frac{h}{2}}^{z_0} E\kappa(x)(z - z_0) v z dz \tag{3}$$

Solving equations (2) and (3) the nonlinear cross-section and the curvature is obtained by

$$z_0(x) = h - 3\frac{F(\ell - x)}{\sigma_T h v} \tag{4}$$

$$\kappa(x) = \frac{2\sigma_T h}{9E\left[\frac{h}{2} - \frac{2F}{\sigma_T h v}(\ell - x)\right]^2} \tag{5}$$

The length of the nonlinear zone is obtained from equation (4) under the condition

$$z_0(x_P) = \frac{h}{2}$$

$$x_P = \ell - \frac{\sigma_T h^2 v}{6F} \tag{6}$$

The nonlinear zone of the supported cross-section is also obtained from equation (4)

$$z_0(0) = h - 3\frac{F\ell}{\sigma_T h v} \tag{7}$$

Substituting equation (4) and (5) to equation (1) under the conditions $x_c = 20\ \mathrm{cm}$ and z= $-\frac{h}{2}$ the maximal compressive stress at the supported end is obtained by:

$$\sigma\left(x_c, -\frac{h}{2}\right) = -E\kappa(x_c)\left(-\frac{h}{2} - z_0(x_c)\right) \tag{8}$$

	In the linear zone (S3 section)
	The stress distribution is given by $$\sigma(x,z) = -E\kappa(x)z \quad (9)$$ The moment equation of equilibrium is given by $$F(\ell - x) = -\int_{-\frac{h}{2}}^{z_0} E\kappa(x)zvzdz \quad (9)$$ Solving equation (10) the curvature is obtained by $$\kappa(x) = \frac{12F(\ell - x)}{Eh^3v} \quad (11)$$ Integrating equations (5) and (11) two times the deflection is obtained by $$e_z(l) = \int_0^{\ell}\int_0^{x} \kappa(\xi)d\xi\, dx \quad (12)$$

Software Release Number: X4r3
Date: 07. 02. 2018.
Tested by: InterCAD

Thema	Clamped beam with *only compression nonlinear* material model – Theoretical background
Geometry	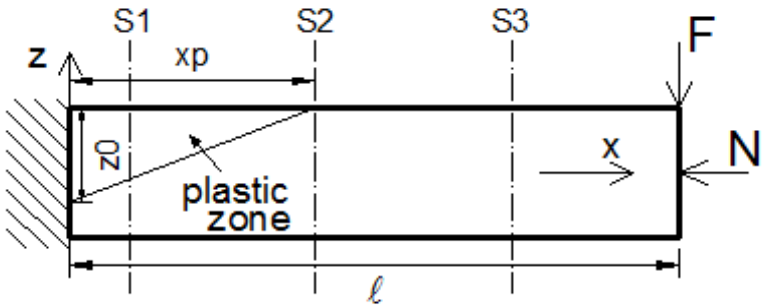
Stress distribution	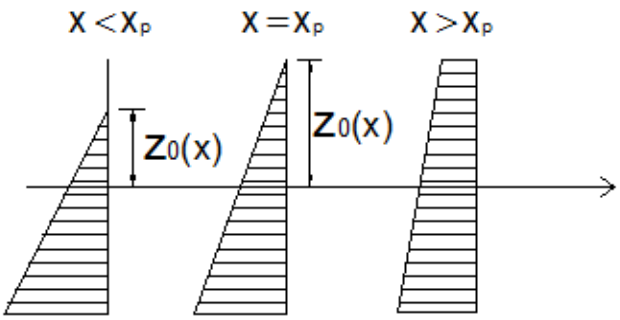
Equations	**In the nonlinear zone (S1 section)**

$$\sigma(x,z) = \begin{cases} 0 & \text{if } z_0(x) < z \\ -E\kappa(x)\big(z - z_0(x)\big) & \text{if } z < z_0(x) \end{cases} \tag{1}$$

The normal force and the moment equations of equilibrium are given by

$$N = \int_{-\frac{h}{2}}^{z_0} E\kappa(x)\big(z - z_0(x)\big)v dz \tag{2}$$

$$F(\ell - x) = -\int_{-\frac{h}{2}}^{z_0} E\kappa(x)(z - z_0)vzdz \tag{3}$$

Solving equations (2) and (3) the nonlinear cross-section and the curvature is obtained by

$$z_0(x) = h - 3\frac{F(\ell - x)}{N} \tag{4}$$

$$\kappa(x) = \frac{8N^3}{9Ev[Nh - 2F(\ell - x)]^2} \tag{5}$$

The length of the nonlinear zone is obtained from equation (4) under the condition

$$z_0(x_P) = \frac{h}{2}$$

$$x_P = \ell - \frac{Nh}{6F} \tag{6}$$

The nonlinear zone of the supported cross-section is also obtained from equation (4)

$$z_0(0) = h - 3\frac{F\ell}{N} \tag{7}$$

Substituting equation (4) and (5) to equation (1) under the conditions $x_c = 20\,\mathrm{cm}$ and $z = -\frac{h}{2}$ the maximal compressive stress at the supported end is obtained by:

$$\sigma\left(x_c, -\frac{h}{2}\right) = -E\kappa(x_c)\left(-\frac{h}{2} - z_0(x_c)\right) \tag{8}$$

	In the linear zone (S3 section)
	The stress distribution is given by $$\sigma(x,z) = -E\kappa(x)z \quad (9)$$ The moment equation of equilibrium is given by $$F(\ell - x) = -\int_{-\frac{h}{2}}^{z_0} E\kappa(x)zvzdz \quad (10)$$ Solving equation (9) the curvature is obtained by $$\kappa(x) = \frac{12F(\ell - x)}{Eh^3v} \quad (11)$$ Integrating equations (5) and (10) two times the deflection is obtained by $$e_z(l) = \int_0^{\ell}\int_0^{x} \kappa(\xi)d\xi\, dx \quad (12)$$